SRM VALLIAMMAI ENGINEERING COLLEGE
(An Autonomous Institution)

SRM Nagar, Kattankulathur – 603 203.

DEPARTMENT OF CIVIL ENGINEERING

SURVEY LAB MANUAL

ACADEMIC YEAR 2026- 2027

(ODD Semester)
CE3366 - SURVEYING AND LEVELLING LABORATORY

(REGULATION 2023)

PREFACE

This instruction manual has been prepared by the department of Civil Engineering to facilitate instructions doing practical classes and further to be used as a reference manual by the third semester Civil Engineering students of this college. This manual cover explanation of experiments included in the syllabus of the Anna University according to **Regulation 2023 CE3366 - Surveying and Levelling Laboratory** for the B.E Civil engineering degree course.

Dr.S.SURESH BABU

Associate Professor

GENERAL INSTRUCTIONS

1. All the students are instructed to wear protective uniform, shoes and cap during lab sessions.
2. Before doing any exercise, students should have a clear idea about the principles of that exercise.
3. All the students are advised to come with completed record and corrected field book of previous experiments; defaulters will not be allowed to do the next experiment.
4. Before using any instruments, students should get concerned staff members' prior permission.
5. Utmost care must be taken to avert any possible injury while on laboratory work. In case, anything occurs immediately report it to the staff members.
6. One student representing each batch should receive the instrument on behalf of his batch.
7. All instruments and accessories should be handed over to the technicians of the lab as soon as the exercises are over and before leaving the laboratory.
8. All instruments are costly. So the permanent adjustment screws of theodolites, levelling and other instruments shall not be tampered. They must be handled carefully, to avoid fine for any breakage

CE3366 SURVEYING AND LEVELLING LABORATORY L T P C

0 0 4 2

COURSE OBJECTIVES

The main learning objective of this course is to prepare the students for:

- To train the student to acquire skill on chain and compass surveying.
- To train students to gain experience on plane table surveying.
- To have hands on experience on operating theodolite.
- To gain practical knowledge on levelling.
- To gain practical knowledge on total station

Chain Surveying

1. Study of chains and its accessories, Aligning, Ranging, Chaining and Marking Perpendicular offset

Compass Surveying

2. Compass Traversing – Measuring Bearings & arriving included angles Levelling – Study of levels and levelling staff

3. Fly levelling using Dumpy level & Tilting level

4. Check leveling

Theodolite - Study of Theodolite

5. Measurements of horizontal angles by reiteration and repetition and vertical angles

6. Determination of elevation of an object using single plane method when base is Accessible/inaccessible

Tacheometry – Tangential system – Stadia system

7. Determination of Tacheometric Constants

8. Heights and distances by stadia Tacheometry

9. Heights and distances by Tangential Tacheometry

Total Station - Study of Total Station, Measuring Horizontal and vertical angles

10. Traverse using Total station and Area of Traverse

11. Determination of distance and difference in elevation between two inaccessible points using Total station

12. Setting out works – Foundation marking using tapes single Room

COURSE OUTCOMES:

At the end of this course, learners will be able to:

- Impart knowledge on the usage of basic surveying instruments like chain/tape, compass and levelling instruments.
- Able to use levelling instrument for surveying operations.
- Able to use theodolite for various surveying operations.
- Able to carry out necessary surveys for social infrastructures.
- Able to prepare planimetric maps.

REFERENCES:

1. T. P. Kanetkarand S. V. Kulkarni, Surveying and Levelling, Parts 1 & 2, Pune Vidyarthi Griha Prakashan, Pune, 24th Reprint, 2015.
2. Dr. B. C. Punmia, Ashok K. Jain and Arun K Jain, Surveying Vol. I & II, Lakshmi Publications Pvt Ltd, New Delhi, 17th Edition, 2016.
3. James M. Anderson and Edward M. Mikhail, Surveying, Theory and Practice, Seventh Edition, McGraw Hill 2001.
4. Bannister and S. Raymond, Surveying, Seventh Edition, Longman 2004 a. David Clark, Plane and Geodetic Surveying for Engineers, Volume I, Constable and Company Ltd, London, CBS, 6th Edition, 2004.
5. David Clark and James Clendinning, Plane and Geodetic Surveying for Engineers, Volume II, Constable and Company Ltd, London, CBS, 6th Edition, 2004.
6. S. K. Roy, Fundamentals of Surveying, Second Edition, Prentice 'Hall of India 2004.
7. K. R. Arora, Surveying Vol. I & II, Standard Book house, Eleventh Edition, 2013.

III SEMESTER

LIST OF EXPERIMENTS

Exp. No.	Name of the Experiment	Pg. no.
	CYCLE I	
	Chain Survey	**5**
1.	Plotting the outline of the given building - Cross staff survey	15
2.	Determination of the area of closed traverse	16
3.	Setting out of Foundation marking using tapes Double Room	17
	Compass Survey	**20**
4.	Compass Traversing – Measuring Bearings & arriving included angles	22
	Theodolite Surveying - Tacheometry – Tangential system – Stadia system	**24**
5.	a) Measurements of horizontal angles by repetition method.	28
	b) Measurements of horizontal angles reiteration method.	31
	c) Measurement of vertical angles	33
6.	Determination of heights and distances by Stadia Tacheometry	35
7.	Determination of heights and distances by Tangential Tacheometry	38
	CYCLE II	
	Levelling	**41**
8.	Fly Levelling - Height of collimation method	46
9.	Fly Levelling - Rise and fall method	48
10.	Check Levelling	50
11.	Square contouring	53
	Total Station	**54**
12.	Study of Total Station, measuring horizontal and vertical angles	55
13.	Determination of distance and difference in Elevation between two inaccessible points using Total station	57

CHAIN SURVEY

Chain surveying is the type of surveying in which only linear measurements are taken in the field. This type of surveying is done for surveys of small extent to describe the boundaries of plot of land to locate the existing features on them.

It is the method of surveying in which the area is divided into network of triangles and the sides of the various triangles are measured directly in the field with a chain or a tape and no angular measurements are taken.

Chains are the measuring instrument used in surveying formed by the 100 links of 4mm galvanized mild steel wire. These links are joined by 3 circular or oval wire rings. These rings provide the flexibility to the chains.

Every aspect of the life requires some measuring units. Measurements are used to do the work precisely and accurately. Let it be from kitchen to office, everywhere measurements are used. So as in engineering calculation or measurements holds a very greater role in construction or surveying or any other aspect.

There are various units of measurements such as meters, centimeters, feet's, inches, acre, yards and the list goes on. Same as units there are various instrument used in the measurements of any entity. One of the instruments used in measurement are chains.

Parts of Chains used in Surveying

The chain consists of many small parts used for handling or reading the measurements.

Every aspect of the life requires some measuring units. Measurements are used to do the work precisely and accurately. Let it be from kitchen to office, everywhere measurements are used. So as in engineering calculation or measurements holds a very greater role in construction or surveying or any other aspect.

There are various units of measurements such as meters, centimeters, feets, inches, acre, yards and the list goes on. Same as units there are various instrument used in the measurementsof any entity. One of the instruments used in measurement are chains.

Parts of Chains used in Surveying

The chain consists of many small parts used for handling or reading the measurements.

- At the ends chain is provided with brass handle with swivel joint so that it can be easy to roll or unroll the chain without twisting and knots.
- At every 10th link is provided with a tally of one teeth, 20th link with a tally of two teeth and so on till 40th link. This is provided for the easy reading of measurements.
- At the center of the chain is provided with a circular talley used for easy reading.

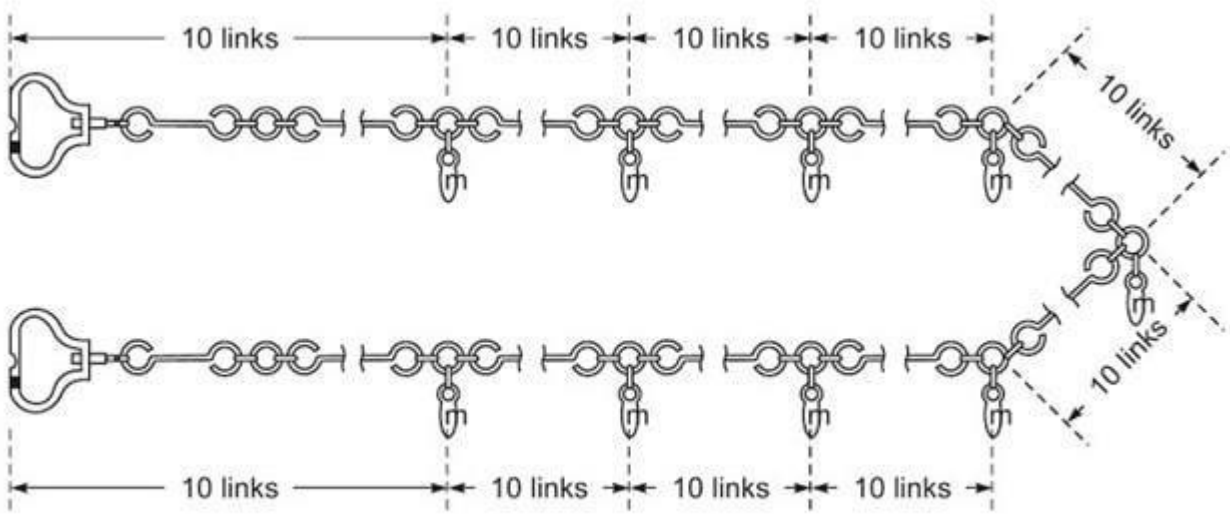

(a) 100 link chain

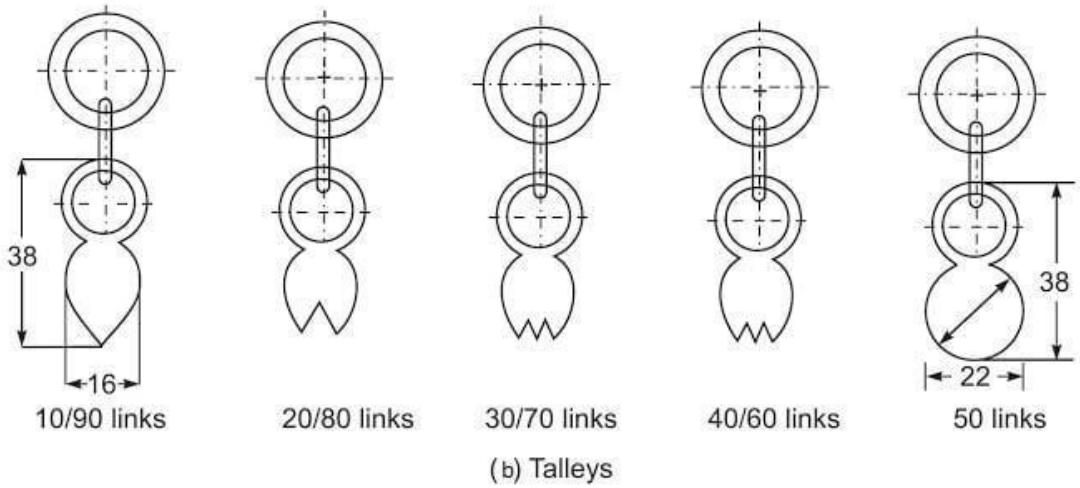

Types of Chains used in Surveying

Depending upon the length of the chain, these are divide into following types,

1. Metric chains
2. Steel band or Band chain
3. Gunter's chain or surveyor's chain
4. Engineer's chain
5. Revenue chain

A. Metric chains

Metric chains are the most commonly used chain in India. These types of chains comes in many lengths such as 5, 10, 20 and 30 meters. Most commonly used is 20m chain. Tallies are provided at every 2m of the chain for quick reading. Every link of this type of chain is 0.2m. The total length of the chain is marked on the brass handle at the ends.

B. Steel band or Band chain

These types of chain consist of a long narrow strip of steel of uniform width of 12 to 16 mm and thickness of 0.3 to 0.6 mm. this chain is divides by brass studs at every 20cm or instead of brass studs, band chain may have graduated engraving as centimeter.

For easy use and workability band chains are wound on steel crosses or metal reels from which they can be easily unrolled. These steel bands are available in 20m and 30m length and the width of about 12-16mm.

C. Gunter's chain or surveyor's chain

Gunter chain comes in standard 66ft. These chain consists of 100links, each link being 0.66ft or 7.92inches. The length 66ft is selected because it is convenient in land measurements.

10 square Gunter's chains = 1 Acre

10 Gunter chains = 1 Furlong

80 Gunter chains = 1 mile

D. Engineer's chain

This chain comes in 100ft length. It consist of 100 links each link being 1ft long. At every 10 links a brass ring or tags are provided for indication of 10 links. Readings are taken in feet and decimal.

E. Revenue Chain

The standard size of this type of chain is 33ft. The number of links are 16, each link being $2\frac{1}{16}$ ft. This chain is commonly used in cadastral survey.

PRINCIPLE OF CHAIN SURVEYING

- The principal of chain surveying is to divide the area into a number of triangles of suitable sides.
- As a triangles is the only simple plane of geometrical figure which can be plotted from the lengths of the three sides even if the angels are not known.
- A network of triangles (triangulation) is preferred to in chain surveying.
- If the area to be surveyed is triangular in shape and if the lengths and sequence of its three sides are recorded the plane of area can be easily drawn.

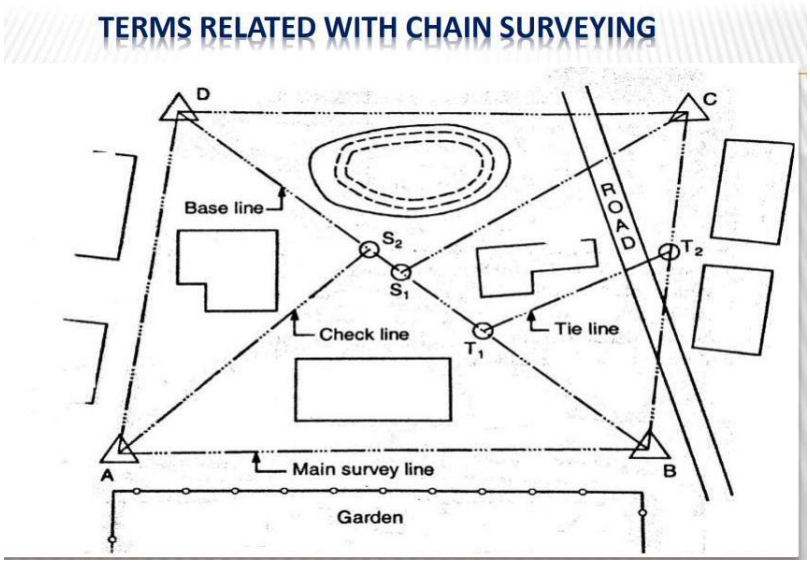

➢

SURVEY STATIONS

Survey stations are the points at the beginning and at the end of the chain line. They may also occur at any convenient position on the chain line. Such stations may be

(a) Main stations (b) Subsidiary stations (c) Tie stations

(a) Main stations: Stations taken along the boundary of an area as controlling points known as 'main stations'. The lines joining the main stations are called 'main survey lines'. The main survey lines should be cover the whole area to be surveyed. The main stations are denoted by ' ' with letters A,B,C,D, etc.

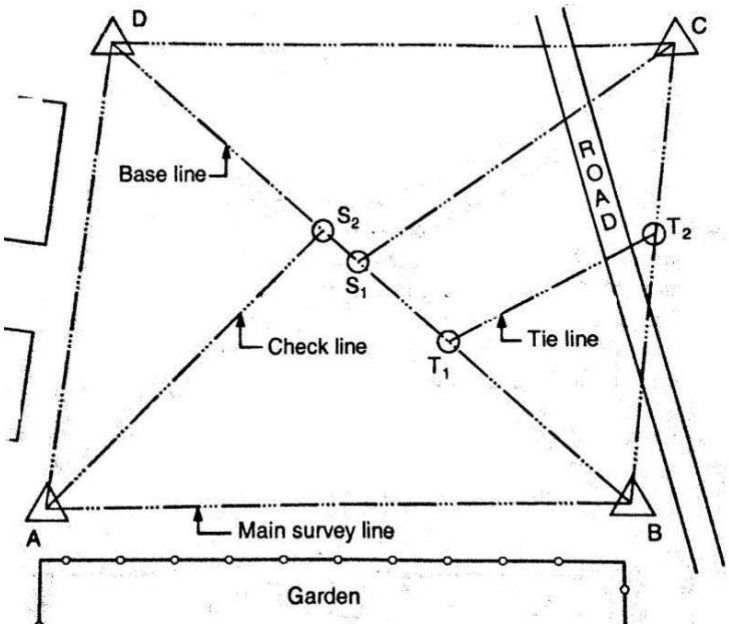

(B) Subsidiary stations: Stations which are on the main survey lines or any other survey lines are known as 'Subsidiary stations'. These stations are taken to run subsidiary lines for dividing the area into triangles, for checking the accuracy of triangles and for locating interior details. These stations are denoted by ' ' with letters S1, S2, S3, etc.

(c) Tie stations: These are also subsidiary stations taken on the main survey lines. Lines joining the tie stations are known as 'tie lines'. Tie lines are taken to locate interior details. The stations are denoted by ' ' with letters T1 , T2 , T3 , etc.

(2) MAIN SURVEY LINES: The lines joining the main stations are called 'main survey lines' or chain lines in fig. AB, BC, CD and DA are the main survey lines.

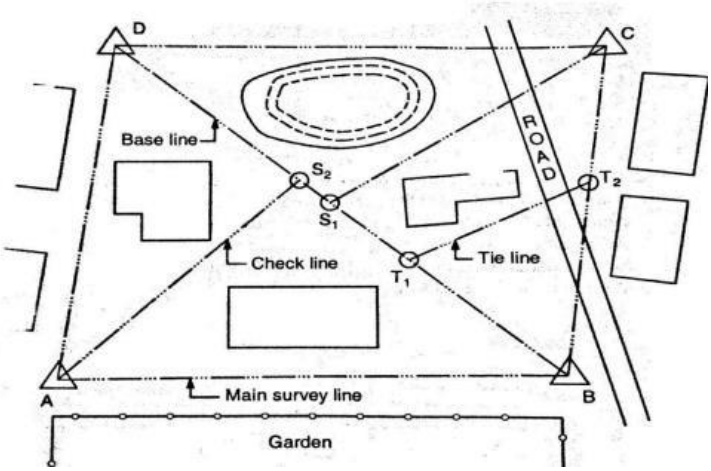

(3) BASE LINE: The line on which the framework of the survey is built is known as the 'base line'. It is the most important line of the survey. Generally, the longest of the main survey line is considered as the base line. This line should be measured very carefully and accurately. In fig. BD is the base line

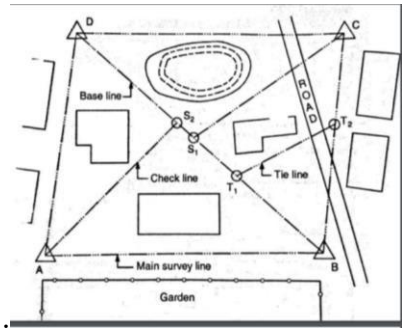

(4) CHECK LINE: The line joining the apex point of a triangle to some fixed points on its base is known as the 'check line'. It is taken to check the accuracy of the triangle. Sometimes this line is helps to locate interior details .In fig.CS1, AS2 are the check lines.

(5) TIE – LINE: A line joining tie stations is termed as a tie line. It is run to take the interior details which are far away from the main lines and also to avoid long offsets. It can also serve as check line. In Fig. T1 T2 is the tie line.

PROCEDURE:

(1) Fix station A and B at some distance by fixing wooden peg to determine horizontal distance between them.

(2) Position of station A and B is fixed by measuring their position from at least three permanent objects and location sketch of station A and B are drawn.

(3) The follower holds one handle of the chain in contact with peg at station A.

(4) The leader takes the other handle of the chain, arrows and ranging rod & walks in the forward direction dragging chain with him.

(5) After the chain is stretched completely along the line the follower steps on one side of the line with the ranging rod touching the handle.

(6) The follower directs to leader to stand exactly in the line. The leader puts a scratch at the position & inserts an arrow. He then moves forward with the chain handle with the remaining arrows and ranging rod till the follower reaches the next arrow point.

STUDY OF CHAIN AND TAPE AND ACCESSORIES USED FOR CHAIN SURVEYING

DESCRIPTION OF THE INSTRUMENTS:-

A) Chain:-

1. The chains are made in lengths of 30 meters/20 meters.
2. The brass tallies are fixed at every 5m length.
3. Small brass rings are provided at every one meter length.
4. It is composed of 100 or 150 pieces of galvanized mild steel wire of 4mm in diameter called links.
5. The ends of each links are bent into a loop and connected together by means of 3 oval rings which give flexibility to the chain.
6. The length of each links is 20cm i.e. the distance between 2 consecutive middle rings.
7. The end of the chains is provided with brass handle for dragging the chain on the ground.
8. The chain length is measured from the outside of one handle to the other.
9. To hold the arrows in the position with the handle of the chain a groove is cut on the outside surface of the handle.

B) Ranging rods:-

1. They are usually of 2m or 3m in length.
2. They are in circular cross section and having alternate black, white and red bands of 20 cm length each to make them visible at a distance.
3. They are used for ranging the lines and for marking the positions of points on the ground.

C) Arrows:-

1. They are made of a steel wire of 4mm diameter for 40cm length.
2. They are pointed at one end for inserting into the ground and bent at the other end for facility of carrying.
3. They are used to mark the end of each chain during chaining.

D) <u>Offset rods:-</u>

1. These are used for measuring rough offsets.
2. They are round rods with pointed end on one side and provided with notch or a hook at the other to facilitate pulling the pushing the chain through obstructions.

E) <u>Cross staff:-</u>

1. It consists of a wooden block with two fine sow cuts at right angles to each other on the top.
2. It is used to set a perpendicular at a given point on the chain line.
3. The head is fixed to a top of an iron staff with pointed end to drive into the ground.

F) <u>Optical square:-</u>

1. This is also used to set a perpendicular with more accuracy.
2. This has 2 mirrors placed at an angle of 45 ° to each other.
3. By means of reflection we can see the ranging rods along the chain line and the offset point at right angles to the chain lines simultaneously.

Expt No. 1 Date: ----------

CHAIN SURVEYING

PLOTTING THE OUTLINE OF THE GIVEN BUILDING-CROSS STAFF SURVEY

Aim:-

To plot the plan of an existing building by running a closed chain traverse and to find the area of the plot.

Instruments Required:-

Chain, Cross staff, optical square, ranging rods, arrow & tape.

Procedure:-

1. Range and chain the lines around the given building to form a rectangle in clockwise/anti clockwise direction.
2. Measure all the offset points (Perpendicular/ Oblique) from the chain line.
3. Plot the building in a drawing sheet with suitable scale.
4. Subtract the un-built up area (open space) of the plot from the total area of the plot to find the built up area of the building.

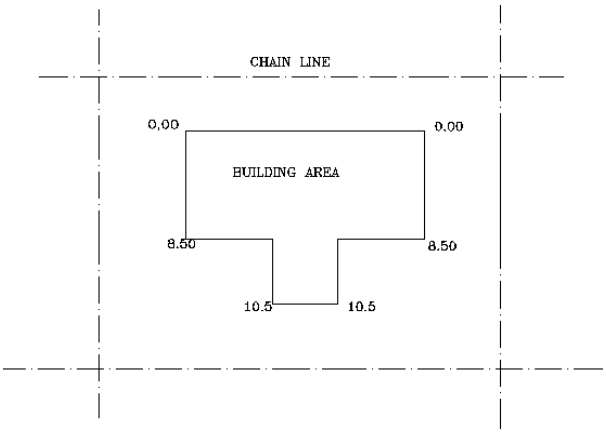

Result:-

The plan of the building is plotted as shown in figure.

Area of the plot (**a**) =..... m^2

Area of the open space (**b**) = ...m^2

Area of the building = (**a**) - (**b**) =.....m^2

Expt No. 2 Date: ----------

DETERMINATION OF THE AREA OF CLOSED TRAVERSE

Aim:-

To find the area of the given boundary by perpendicular offset method.

Instruments Required:

Chain (30m), Ranging rods, arrows, Pegs, cross staff.

Formulae:-

Area of the triangle A= ½ bh sq.units.

Area of the trapezium A= ½ h (a+b) sq.units.

Procedure:-

1. The survey stations are fixed.
2. To range a line AB, the ranging rods are fixed at the end of the line.
3. The surveyors stand just behind the ranging rod A. The assistant holds a ranging rod at point C, approximately on the line AB.
4. Locate the perpendicular offset by using cross staff.
5. Move the cross staff towards left / right.
6. Now base line (AB) is visible and perpendicular line also visible.
7. Perpendicular line measurements are taken.
8. The operation is repeated until the end station of the line is reached.
9. To check the accuracy of the measurement, the line is measured in the reverse direction.
10. Split the area, by triangle and trapezoidal.
11. Calculate the area by using triangle and trapezoidal formula.

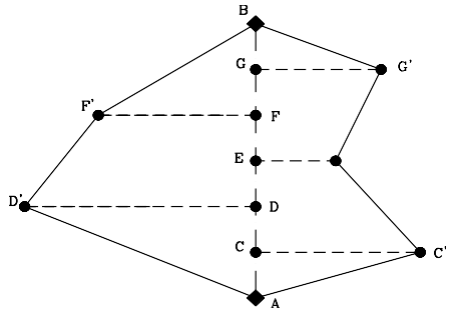

Result:-

The area of the field = ……

Expt No. 3 Date: ----------

SETTING OUT OF FOUNDATION MARKING USING TAPES SINGLE ROOM AND DOUBLE ROOM

Aim:

To determine the setting out the foundation for a building, b using center line method.

Instruments Required:

Theodolite, Pegs, Arrows, Measuring Tape or Chain, mason's square, ball of string, lime powder.

Planning and organization:

A small area is to be kept ready for setting out a simple rectangular building of size 6m x 3m. The site has to be cleaned off any vegetation and made level. or given plan.

Given:

A hall 6m x 3m internal dimension has to be constructed. The wall is 230mm thick. The width of the foundation is 900mm. Set out the building, mark foundation trench.

Procedure:

1. Study the plan of the building and note down the internal dimensions and also the width of the foundation.
2. Prepare the centre line sketch of the building.
3. 3Remove the any vegetation in the construction site.
4. Setting out a straight line slightly greater than the length of the front wall. The frontage is to be located with respected to other features is site plan such as road etc., this line will be the centre line of the front wall.
5. Now mark the two ends of the front wall.
6. Drive two pegs a little away from the ends marked and tied a string accurately.
7. At two ends, set out perpendicular strings using masons square.
8. Stretched strings of the sidewalls and ties\ with pegs a little beyond the required.

9. Repeat the same for other aside walls.
10. Now, stretched strings through the points C and D indicates the ends of the centers lines of the side wall give a rectangle bounded by strings. This rectangle indicates the centre line of the building.
11. Measuring the four sides of the rectangular and check its accuracy as per the centre line sketch prepared.
12. Check the angles of the corners.
13. Measure the diagonals and check for its accuracy.
14. If items 11, 12, 13 are satisfied the rectangle is marked.
15. Mark the width of foundation of wall on ground have the wide on either side of the centre line marked and apply lime powder to indicate outline of the foundation trench.

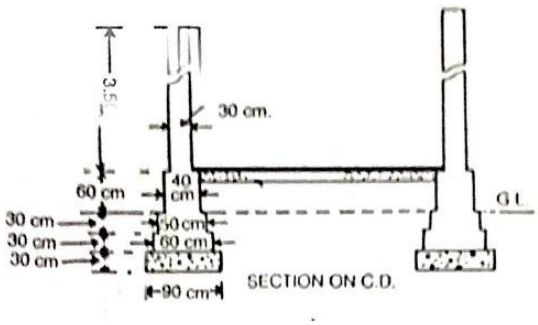

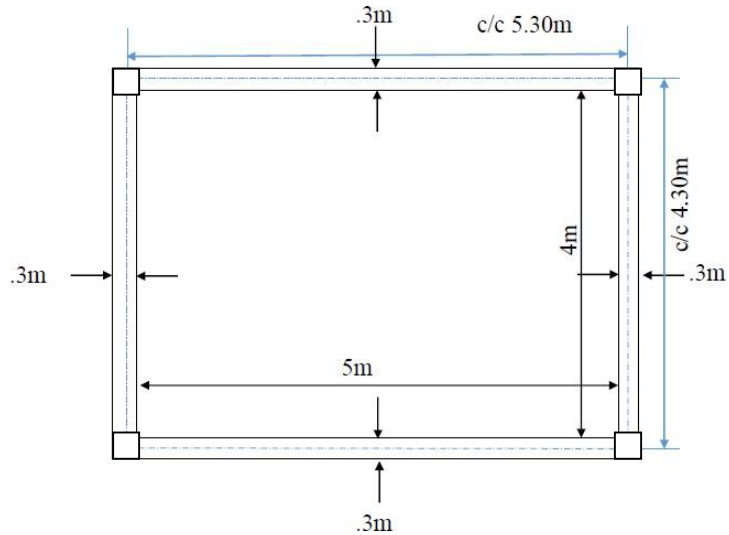

SINGLE ROOM

MARKING OF FOUNDATION

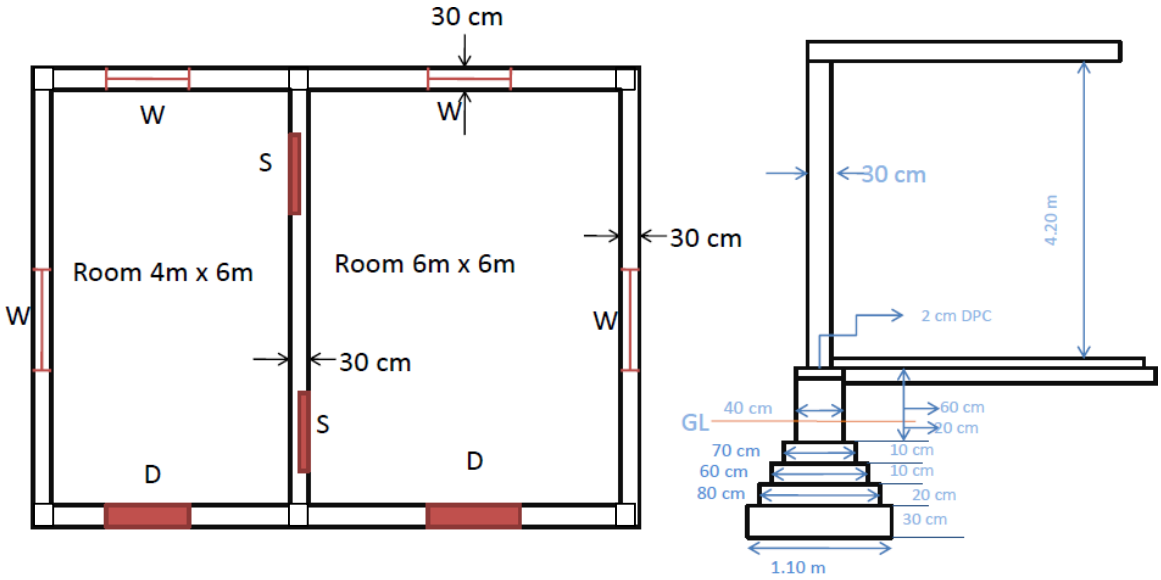

DOORS D 1.20 m x 2.10m
WINDOWS S- 1.00X1.50m
SHELVES S- 1.00m x 1.50m

DOUBLE ROOM

Result:

The foundation marking is done for the given layout.

COMPASS TRAVERSING

STUDY OF COMPASS SURVEYING

DESCRIPTION OF THE INSTRUMENTS

A. Prismatic Compass:-

1. A magnetic needle is attached to the circular ring made up of aluminum.
2. The needle is on the pivot to orient N and S ends.
3. The line of sight is defined by object vane and eye slit both attached to the compass bar.
4. The object vane consists of a vertical hair attached to a suitable frame while the eye slit consist of a vertical slit above the prism unit.
5. When the object is sighted, the sight vanes will rotate with respect to the NS end of the ring through an angle which the line makes with the magnetic meridian.
6. The reading increase in clockwise direction from 0˚ at south and to 90˚ at west end 180˚ at north end and 270˚ at east end.
7. Break- pin is placed at the base of the object vane to clamp the oscillation of the needle while taking reading.
8. To sight the objects, which are too high or too low, a hinged mirror is placed.
9. Dark glasses are used to sight bright objects.

Adjustments of prismatic compass:-

(A) Centering:-

a) It is the process of keeping the instrument exactly over the station.
b) It is done by dropping a pebble from the centre of the bottom of the instrument.

(B) Leveling:-

a) For which the tripod is provided with ball and socket arrangement to fix the compass on level.
b) Adjust the box in such a way that the graduated disc is swinging freely and appears to be level.

(C) <u>Focusing the Prism:-</u>

a) The prism attachment is sided up or down till the readings are seen to be sharp and clear.

B. <u>Surveyors Compass:-</u>

a) The object vane is similar to that of prismatic compass.
b) The eye vane consists of a simple metal vane with the fine slit without the prism.
c) The graduation ring is directly attached to the box and not with needle.
d) The object is to be sighted first with the object and eye vanes and reading is taken against the north end of the needle by looking vertically through the top glass.
e) The card is graduated in quandrantal system having 0˚ at N and S ends & 90˚ at west and east ends.

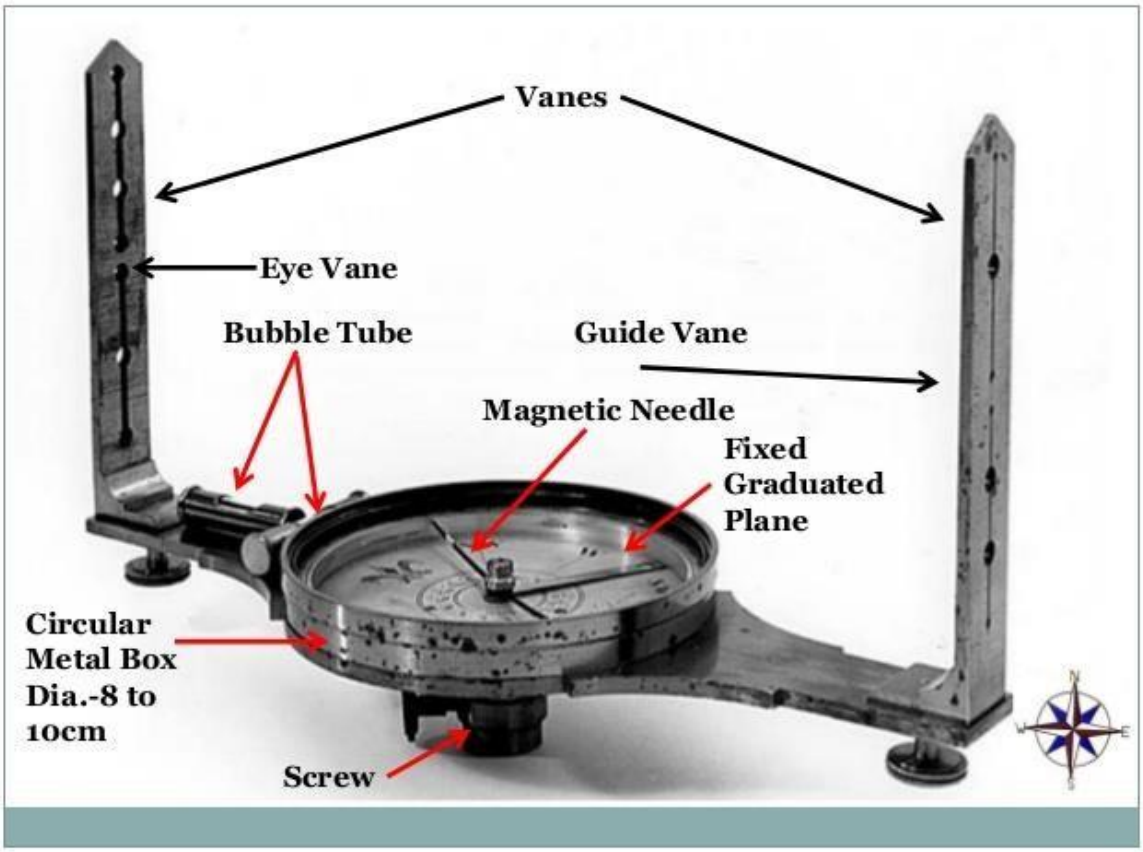

Parts of compass

Expt No. 4 Date: ----------

COMPASS TRAVERSING – MEASURING BEARINGS & ARRIVING INCLUDED ANGLES

Aim: Measurement of bearings of sides of traverse with prismatic compass and computation of correct included angle.

Instruments Required: Prismatic compass, ranging rod, chain, tape, peg Tripod stand

Procedure:

1) Four ranging rods are fixed at different points i.e. A, B, C, D etc. such that it should be mutually visible and may be measured easily.

2) Measure the distance between them. 1) At point A the prismatic compass is set on the tripod Stand, centering and leveling is then properly done. 2) The ranging rod at B is ranged through sighting slits and objective vane attached with horse hair and reading on prismatic compass is noted down.

3) It is fore bearing of line AB. Then the prismatic compass is fixed at B and ranging rod at C and A are sighted. And reading is taken as forbearing of BC and back bearing of AB.

4) Repeat the same procedure at the stations C, D etc.

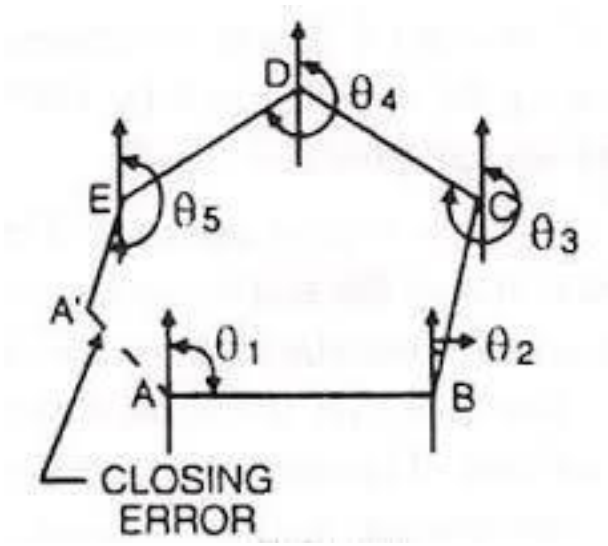

Tabulation:

Inst. Station	Line	Observed bearing	bearing Local attraction	error	Correction	Corrected bearing	Included angle
A	AB						
	AD						
B	BA						
	BC						
C	CB						
	CD						
D	DA						
	DC						

Sample Calculation: Error = observed bearing –corrected bearing

Check: = (2n-4) x 900

Result:

The prismatic compass is studied and bearing of lines of traverse are Observed, the correction dueto local attraction at affected station is done and corrected bearings are written in tabular form.

STUDY OF THEODOLITE

Aim:

To study about the Temporary and Permanent adjustments of a Theodolite.

Instrument used:

Theodolite

ADJUSTMENTS OF THEODOLITE

The Theodolite should be properly adjusted to obtain accurate observations. The adjustments are mainly of two types. They are as follows:

1. Permanent adjustments and

2. Temporary adjustments.

1. Permanent adjustments

The permanent adjustments are to be done to maintain the required standard relationship between the fundamental lines (axes) of a Theodolite. The fundamental lines are as follows:

a. Vertical axis

b. Horizontal axis or trunnion axis

c. Line of collimation or line of sight

d. Axis of plate level

e. Axis of altitude level.

Required relations between the fundamental lines (axes)

i) The axis of plate level must be perpendicular to the vertical axis.

ii) The line of collimation must be perpendicular to the horizontal axis

iii) The horizontal axis must be perpendicular to the vertical axis.

iv) The axis of the altitude level must be parallel to the line of collimation.

v) The vernier reading of vertical circle must read zero when the line of collimation is horizontal.

The permanent adjustments of a Theodolite are:

- Adjustment of plate level.
- Adjustment of line of sight
- Adjustment of horizontal axis
- Adjustment of altitude bubble and vertical index frame.

2. Temporary adjustments

The adjustments which are carried out at every setting of the instrument before the observations are referred as temporary adjustments. There are three types of temporary adjustments as follows.

a. Setting up

b. Levelling up

c. Elimination of parallax.

a) Setting up

This adjustment includes the following two operations.

i. Centering the Theodolite over the instrument station.

ii. Approximate leveling of Theodolite with the help of the tripod legs only.

Centering

It is the operation by which the vertical axis of the theodolite represented by a plumb line is made to pass through the mark of instrument station on the ground.

Approximate levelling

The approximate leveling may be done with the reference to a small circular bubble provided on the tribrach or by eye judgments.

b) Levelling up

The operation of making the vertical axis truly vertical is known as leveling of the Theodolite. After the centering and approximate leveling an accurate leveling is to be done with the help of foot screws.

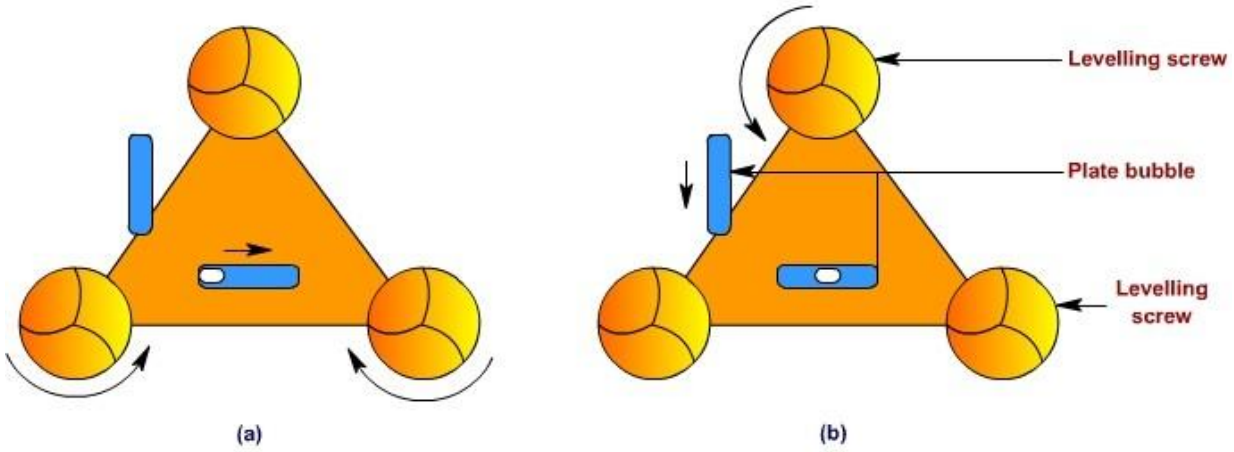

i) First the telescope is to be kept parallel to any of the two foot screws as in the figure.

ii) The bubble of plate level is to be brought to the centre of its run by turning the foot screws either inwards or outwards simultaneously.

iii) Then the telescope is to be turned through 90°, so that it lies over the third foot screw (i.e perpendicular to the first position)

iv) The bubble is to be brought to the centre of its run by turning the third foot screw either clockwise or anticlockwise.

v) Then the telescope is brought back to its original position (position at (i)) and the position of bubble is checked whether it remains in the center or not.

vi) If the bubble is not in centre the above operations are repeated till the bubble retain at centre in both the positions.

c) Elimination of parallax.

An apparent change in the position of an object caused by the change in position of the observer's eye is known as parallax. This can be eliminated in two steps.

i) Focusing the eye piece for distinct vision of the cross hairs.

ii) Focusing the objective to bring the image of the object in the plane of cross hairs.

<u>i) Focusing the eye piece</u>

The telescope is to be pointed towards the sky or a sheet of white paper is to be hold in front of the objective.

The eye piece is to be moved in or out by rotating it gradually until the appearance of cross hairs becomes sharp and distinct.

<u>ii) Focusing the objective</u>

Telescope is to be directed towards the object. Focusing screw is to be turned until the appearance of the object becomes sharp and clear.

Expt No. 5 A Date: ----------

MEASUREMENT OF HORIZONTAL ANGLES BY REPETITION METHOD

Aim: To measure the horizontal angle by Repetition method with the use of Theodolite.

Apparatus used: Theodolite, ranging rods, pegs or Arrows.

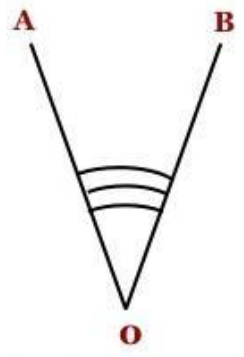

PROCEDURE

1. Theodolite is set over an instrument station (O) exactly and all the temporary adjustments are done. Vertical circle is placed left to the observer (face left observation).

2. Vernier A is set to Zero with the help of upper clamp screw and tangent screws. Readings of Vernier A and B are noted.

3. Upper clamp is clamped. Lower clamp is loosened and the telescope is turned towards "A". Lower clamp is clamped and the point "A" is bisected exactly using tangent screws.

4. Both the vernier A and B are read and noted (Must be equal to 0° and 180° respectively).Upper clamp is unclamped and the telescope is turned clockwise and "B" is bisected.

5. Upper clamp is clamped and "B" is bisected exactly using tangent screws. Both the verniers are read. Mean of the readings provide an approximate included angle of AOB.

6. The reading of vernier A gives directly the angle AOB, and 180° is subtracted by the reading of vernier B. The mean value of two readings gives the angle AOB with one face.

7. Lower clamp is unclamped and the telescope is turned anticlockwise to sight A again. Lower clamp is clamped and A is bisected exactly using tangent screws.

8. Upper clamp is loosened and the telescope is turned clockwise and B is bisected. Upper clamp is clamped and B is bisected exactly using tangent screws. The vernier now read twice the value of angle AOB.

9. Last two steps (7&8) are repeated once again to get the thrice value of angle AOB.

10. Finally obtained reading is divided by 3 to get the mean value of angle AOB.

11. The face is changed and the whole process is repeated. (Face right observations).

12. Average value of two horizontal angles obtained with face left and face right observations is determined.

Measurement of Horizontal Angle (Repetition Method)																													
Instrument Station	**Sight to**	**Face:**									**Swing:**			**Face:**									**Swing:**			**Average Horizontal angle**		
		A			**B**			**Mean**			**Horizontal angle**			**A**			**B**			**Mean**			**Horizontal angle**					
		0	′	″	0	′	″	0	′	″	0	′	″	0	′	″	0	′	″	0	′	″	0	′	″	0	′	″

Result:

The horizontal angle measured at O between A and B. i.e AOB

With face left:-

With face right:-

Average:-

Expt No. 5 b Date: ----------

MEASUREMENT OF HORIZONTAL ANGLES BY REITERATION METHOD

Aim:- To measure the horizontal angle by Reiteration method with the use of Theodolite.

Apparatus used:- Theodolite, Ranging rods, Pegs or Arrows.

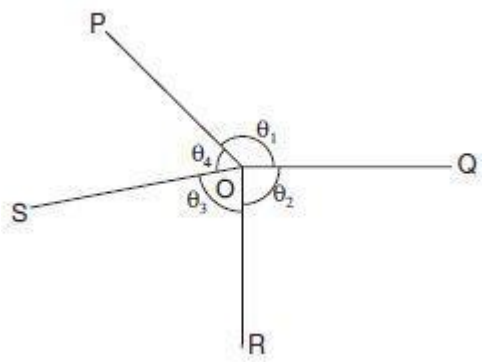

PROCEDURE

1. .Theodolite is set over an instrument station (O) exactly and all the temporary adjustments aredone. Vertical circle is placed left to the observer (face left observation).

2. Vernier A is set to Zero with the help of upper clamp screw and tangent screws. Readings ofVernier A and B are noted.

3. Upper clamp is clamped. Lower clamp is loosened and the telescope is turned towards "P". Lowerclamp is clamped and the point "P" is bisected exactly using tangent screws.

4. Upper clamp is loosened and the telescope is turned clockwise to bisect R. Lower clamp isclamped and R is bisected exactly using tangent screws. Both the verniers are read and noted.

5. The same procedure is repeated for all other points.

6. The face is changed and all the above steps are repeated. (Face right observations).

7. Reading from Q is subtracted by reading R to get included angle QOR. Reading from R issubtracted by reading S to get included angle ROS.

8. The same procedure is followed to get readings of all other included angles.

Measurement of Horizontal Angle (Reiteration Method)																													
Instrument Station	**Sight to**	**Face: Swing:**												**Face: Swing:**												**Average Horizontal angle**		
		A			**B**			**Mean**			**Horizontal angle**			**A**			**B**			**Mean**			**Horizontal angle**					
		0	′	″	0	′	″	0	′	″	0	′	″	0	′	″	0	′	″	0	′	″	0	′	″	0	′	″

<u>Result</u>

The horizontal angle between the points

i) Face Left **ii) Face Right**

POQ = POQ =
QOR = QOR =
ROS = ROS =
SOP = SOP =

Expt No. 5 c Date: ----------

MEASUREMENT OF VERTICAL ANGLES

Aim: To measure the vertical angle between two objects with the use of Theodolite.

Apparatus Used: Theodolite, ranging rods, pegs or Arrows.

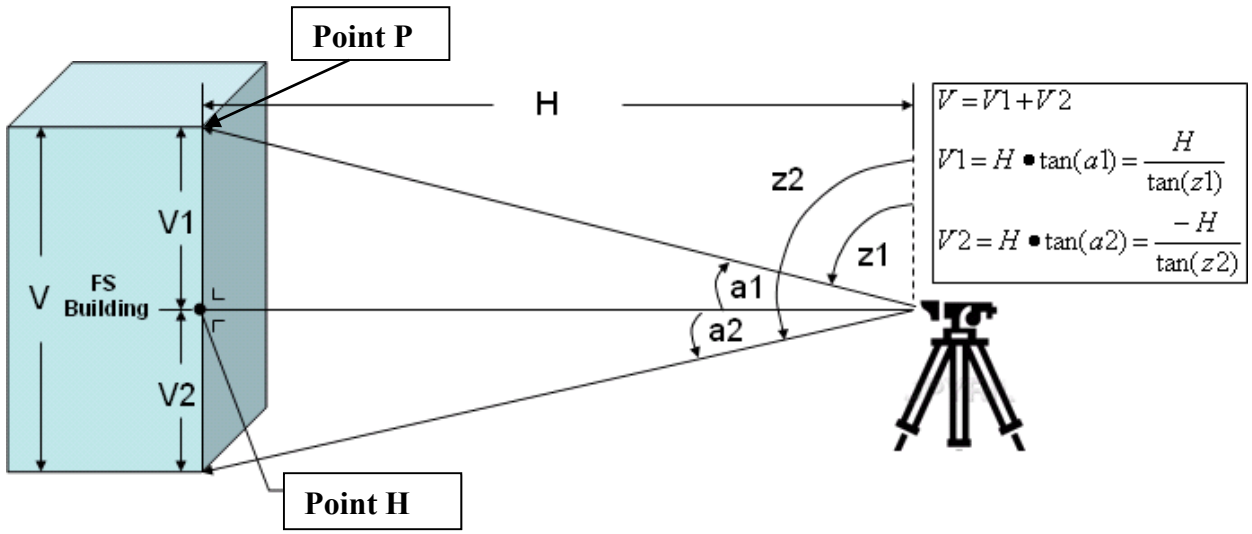

PROCEDURE

1. Theodolite is set up, centered and leveled with reference to the plate bubble.

2. Telescope is placed horizontally by setting the reading of 0°0’0”in the verniers of C and D.

3. Levelling process is carried out with the help of foot screws and the altitude bubble is brought in its central run.

4. Vertical circle clamp is loosened and the telescope is directed upwards to bisect P.

5. Vertical circle clamp is clamped and the point P is exactly bisected using vertical tangent screws.

6. Both the verniers of C and D are read and noted. Mean of the two verniers provide the vertical angle HOP.

7. Face is changed and all the above steps are repeated to get one more vertical angle HOP.

8. Average of the vertical angles taken to get an accurate vertical angle.

9. The same procedure may be adopted to determine the angle of depression HOR by directing the telescope downwards.

Measurement of Vertical Angle																													
Instrument Station	**Sight to**	**Face: Swing:**												**Face: Swing:**												**Average Vertical angle**		
		A			**B**			**Mean**			**Vertical angle**			**A**			**B**			**Mean**			**Vertical angle**					
		0	′	″	0	′	″	0	′	″	0	′	″	0	′	″	0	′	″	0	′	″	0	′	″	0	′	″

Result

1. The observed angle of Elevation is ----------
2. The observed angle of Depression is ----------

Expt No. 6 Date: ----------

DETERMINATION OF HEIGHTS AND DISTANCE BY STADIA TACHEOMETRY

Aim: To determine the length of the traverse legs and to find the area enclosed by the traverse.

Instrument required: Tacheometer with tripod, levelling staff

Formula

Tachometric equation: $D = Ks+C$

Where,

K = Multiplying constant
C = Additive constant
s = staff intercept
D = distance of peg points

$C^2 = a^2 + b^2 - 2ab \cos \theta$

Area = (1/2) ab sin C

PROCEDURE

1. The instrument is kept at O from which observation can be taken to all the given points and the temporary arrangements are made.
2. Levelling staff is kept at various points and after keeping the line of sight horizontal, staff intercepts are taken.
3. Horizontal angles subtended by these stations with the instrument are also observed.
4. With these set of readings, area & the lengths are computed.

Instrument Station	Sight to	Stadia horizontal readings		Horizontal angles
		Top	Bottom	
O	A			AOB =
	B			BOC =
	C			COD =
	D			DOE =
	E			EOA =

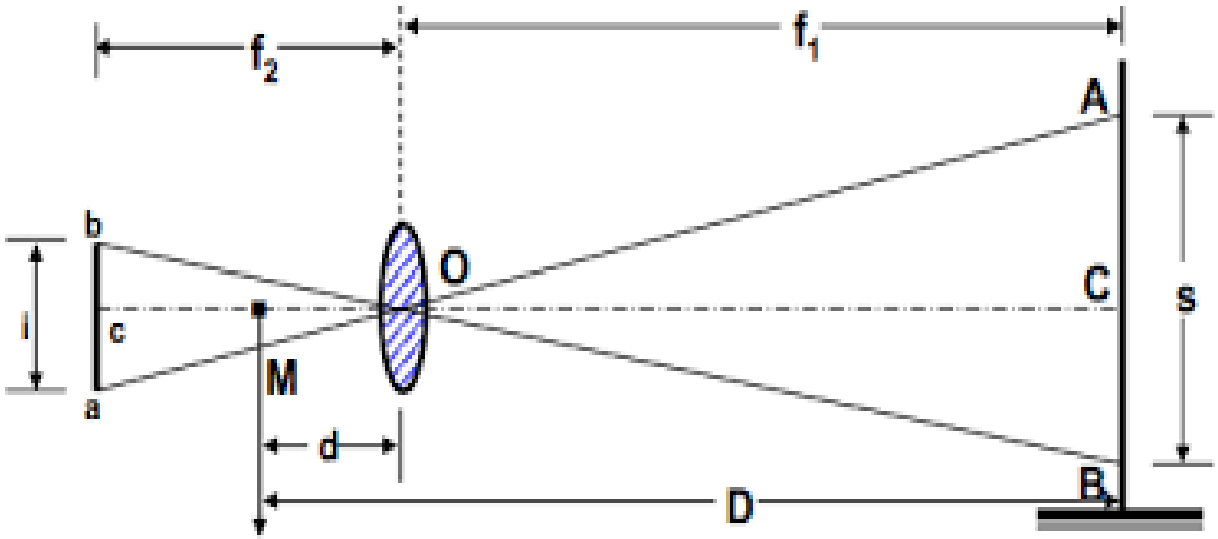

Fig: PRINCIPLE OF STADIA METHOD

Instrument Station	Station bisected	Observation	Angle	Reading on vernier						Angle on vernier						Mean angle of vernier			Mean angle of observation			Correction			Corrected angle		
				A			B			A			B														
1	2	3	4	5			6			7			8			9			10			11			12		
				0	′	″	0	′	″	0	′	″	0	′	″	0	′	″	0	′	″	0	′	″	0	′	″
O	A B C D E A	Face : Left Swing : Right	AOB																AOB =						AOB =		
			BOC																								
			COD																BOC =						BOC =		
			DOE																								
			EOA																COD =								
O	A B C D E A	Face : Right Swing : Right	AOB																						COD =		
			BOC																DOE =								
			COD																								
			DOE																EOA =						DOE =		
			EOA																								

Result:

1. The length of traverse legs:

AB =
BC =
CD =
DE =
ED =

2. The area of closed traverse is _____

Expt No. 7 Date: ----------

DETERMINATION OF HEIGHTS AND DISTANCE BY TANGENTIAL TACHEOMETRY

Aim: To determine the reduced level of the object by using tangential tacheometry.

Instrument required: Tacheometer with tripod levelling staff

Formula

1. For Both angles of elevation

$D = S/ (\tan \alpha_1 - \tan \alpha_2)$
$V = D \tan \alpha_2$
RL of Q = HI + V- r

2. For both angles of depression

$D = S /(\tan \alpha_2 - \tan \alpha_1)$
$V = D \tan \alpha_2$
RL of Q = HI – V - r

3. For one angle of elevation and one depression

$D = S /(\tan \alpha_2 + \tan \alpha_1)$,
$V = D \tan \alpha_2$
RL of Q = HI - V- r

PROCEDURE

1. The instrument is set up at station P and temporary adjustments are made.
2. A Staff reading is taken on the BM with a horizontal line of sight.
3. The telescope is transited. Upper tangent is sighted on the staff held at station Q and the angle of elevation α_1 is noted.
4. The telescope is depressed. The lower tangent is sighted on the same staff and the angle α_2 is noted.
5. The staff intercept between the two tangents is noted.
6. Using the relevant formula, the RL of the given point.

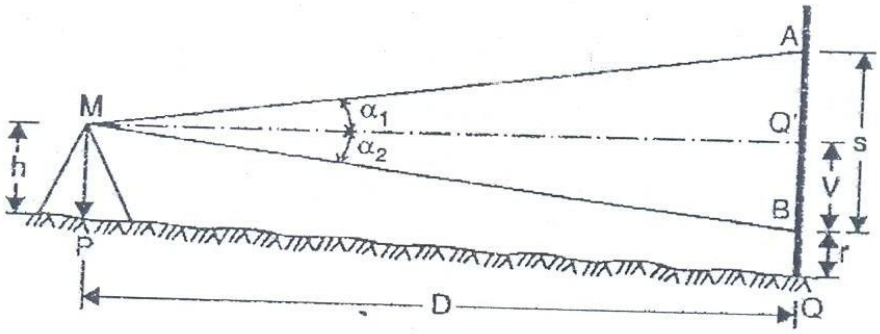

FIG. 22.22. ONE ANGLE OF ELEVATION AND THE

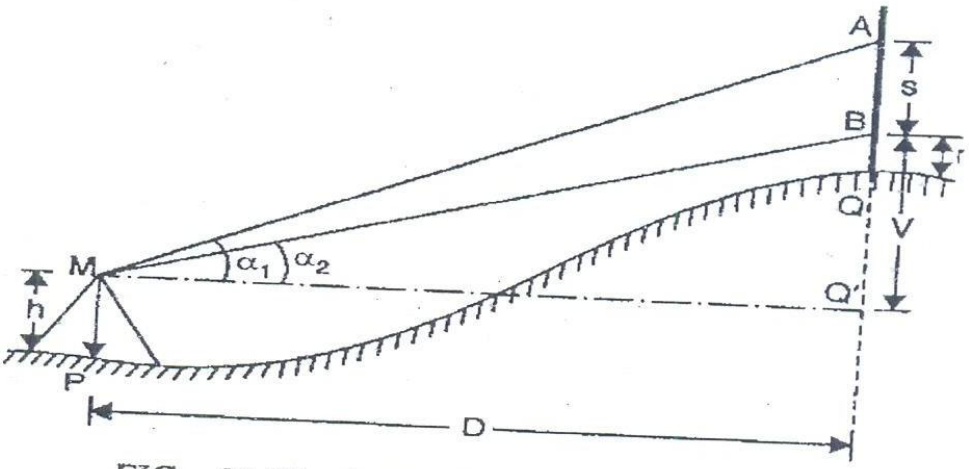

FIG. 22.20. TANGENTIAL METHOD : ANGLES OF ELEVATION

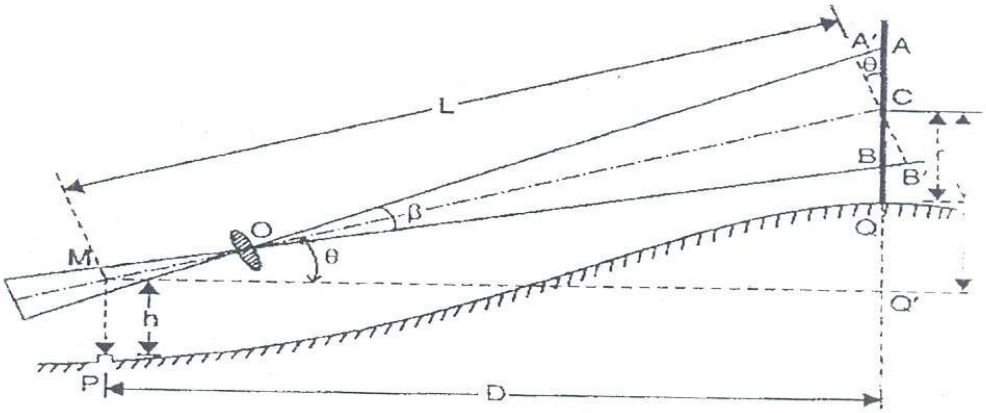

FIG. 22.5. ELEVATED SIGHT : VERTICAL HOLDING.

Instrument Station	Object	Observation	Reading on vernier						Angle on vernier						Mean angle of vernier			Mean angle of observation			Stadia readings	Stadia Intercept	Height of instrument
			C			D			C			D											
1	2	3	4			5			6			7			8			9			10	11	12
			0	′	″	0	′	″	0	′	″	0	′	″	0	′	″	0	′	″	m	m	m
O	P Q	Face : Left Swing : Right																					
	P Q	Face : Right Swing : Right																					

RL of BM =_____m

Result:

1. The RL of a given object =_____m

2. Distance between the instrument station and staff station =_____m

LEVELLING

DESCRIPTION OF THE INSTRUMENTS: -

The level: -

The instrument which is used for measuring related elevations is known as a level and consists of the following parts.

1. A telescope to provide a line of sight.
2. A level tube to make the line sight horizontal.
3. A leveling head to bring the bubble of the level tube at the center of its run.
4. A tripod head to support the above three parts of the level.

Types of level: -

The dumpy level: -

1. This consists of a telescope rigidly fixed to its support.
2. It can neither be rotated about it longitudinal axis nor it can be removed from its support.

The wye level: -

1. The telescope is supported in Y supports and is not rigidly fixed to the supports.
2. The telescope can be removed from the supports reversed end to end and can be revolved about its longitudinal axis.

The reversible level: -

1. The telescope can be rotated about its longitudinal axis in the sockets and also can be withdrawn from its sockets and replaced end for end.

The tilting level: -

1. The telescope can be tilted within few degree in vertical plane by a tilting screw.
2. This designed for precise work.

Temporary adjustments of the dumpy level: -

a) Setting up the level: -

1. This includes fixing the instrument on the tripod and levelling the instrument approximately by leg adjustment.
2. To do this release the clamp hold the instrument in the right hand and fix it on a tripod by turning rounded the levelling head with left hand.
3. The tripod legs are adjusted so that the telescope is at a convenient height and is leveled approximately.

b) Levelling up: -

1. This is done with the help of three-foot screws and by using plate levels.
2. The object of levelling is to make its vertical axis truly vertical.
3. First loosen the clamp screw and turn the instrument until the longitudinal axis of the bobble tube is parallel to a joining any two levelling screws (say A and B).
4. Holding these two foot screws with the thumb and first finger of each hand turn them uniformly so that the thumbs move either towards each other on away from each other until the bubble comes to the center of the tube.
5. Rotate the upper plate through 90° until the axis of the plate level coincides a line joining the third foot screw C and the midpoint of the first two screws A and B.
6. Hold the third with the thumb and find finger of the right hand and turn it until the plate bubble is central.
7. Rotate the upper plate through 90° to its original position and repeat step 4 till the bubble is central.
8. Rotate again through 90 and repeat step 6.
9. Repeat steps 4 and 6 till bubble remains central in both the position.
10. Rotate the instrument through 180° and in this position the bubble should remain central if the instrument is in adjustment.

Elimination of parallax: -

1. Parallax is a condition arising when the image formed by the objective is not in the plane of the cross hairs.
2. To get accurate sighting those should be eliminated and this is done.
3. By focusing the eyepiece for distinct vision of the cross hairs and

4. By focusing the objective to bring the image of the object in the plane of cross hairs.

Focusing the eyepiece: -

1. Direct the telescope either towards the sky or hold a sheet of white paper in front of the objective.
2. Move the eyepiece in or out till the cross hairs appear distinct.

Focusing the objective: -

1. Direct the telescope towards the leveling staff.
2. Turn the focusing screw till the image appears clear and sharp.
3. The image formed must be in the plane of cross hairs.

DEFINITIONS

Important terms: -

The following are the important terms used during levelling.

1. Level surface: -

A level surface is any surface parallel to the mean spheroidal surface of the earth.

2. A level line: -

It is a line lying in a level surface and normal to the plumb line at all points.

3. A horizontal plane: -

A horizontal plane through a point is a plane tangential to the surface at that point.

4. A horizontal line: -

It is a line lying in the horizontal plane.

5. Vertical line: -

Vertical line any point is a line normal to the level surface through that point.

6. Vertical plane: -

A plane is a plane containing a vertical line.

7. Datum surface: -

It is any arbitrary assumed level surface form which vertical distances are measured.

8. Elevation: -

Elevation of a point is its vertical distance above or below the datum also known as reduced level (R.L)

9. Bench mark: -

It's fixed reference point of known elevation.

10. Line of collimation: -

It is the line joining the intersection of the cross hairs to the optical center of the object glass and its continuation also known as line of sight.

11. Axis of telescope: -

It is the line joining optical center of the object glass to the center of the eyepiece.

12. Vertical axis: -

It is the center line of the axis of rotation.

13. Back sight (B.S): -

It is a staff reading taken on a point of known elevation (i.e.) on Bench Mark or change point, and is the first reading taken after the level is set up and leveled.

14. Fore sight (F.S): -

It is a last staff reading on a point whose elevation is to be determined as on a change point.

15. Intermediate sight: -

It is any other intermediate staff reading taken on a point of unknown elevation from the same set of the level.

16. Change point: -

It is a point denoting the shifting of the instrument. It is a point on which the back and foresights are taken.

17. Station: -

It is a point whose elevation is to be determined or a point which is to be established at a given elevation.

18. Height of instrument: -

It is the elevation of the plane of collimation when the instrument is correctly levelled.

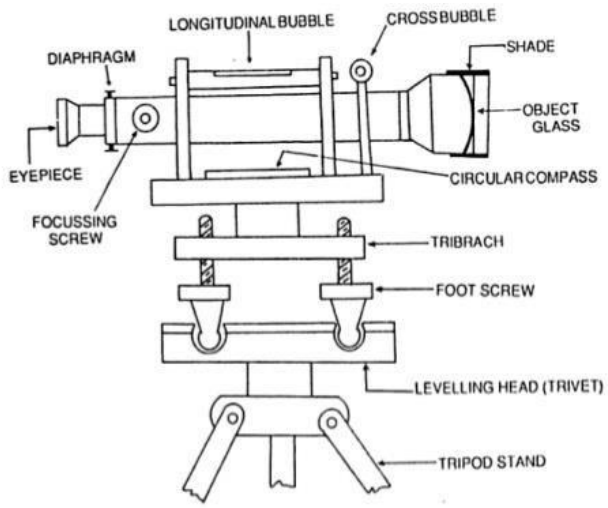

Figure; Dumpy level

Expt No. 8 Date: ----------

FLY LEVELLING -HEIGHT OF COLLIMATION METHOD

Aim: To determine the reduce Level of the given points A, B, C, D, E and F by fly leveling.

Apparatus required: Dumpy level, leveling staff, tripod stand, arrows, and pegs.

Procedure:

1) Set up the instrument to cover maximum number of points and do the temporary adjustment.
2) Observe the 1st staff reading on the Bench mark whose reduce level is known. Enter1streading in the back sight (BS) Column.
3) Take the staff reading on the bench mark, which ever are visible from this set up. Enter it is in the intermediate sight column.
4) Before shifting the instrument take the staff reading on the change point. Enter it on Fore sight.
5) After shifting and setting the instrument in the second instrument station and do temporary adjustment.
6) Take the staff reading on the same change point enter it in the back sight column of the same line
7) Then take the staff reading on the remaining given points and enter it in intermediate sight column.
8) Compute the reduce levels of the point by Height of Collimation method
9) Do the arithmetic check if the ok, it shows the calculation is correct.

Tabulation

Reduced Level of the first point =…….

Staff station	B.S	I.S	F.S	H.I	R.L	Remarks

Calculation

R.L of B.M+ B.S = H.I

H.I – F.S (or) I.S = R.L of that particular point.

Arithmetic Check:

∑B.S - ∑ F.S = Last RL – First RL

Result:

Reduced levels of the points are ----------

Expt No. 9 Date: ----------

FLY LEVELLING –RISE AND FALL METHOD

Aim: To determine the reduce Level of the given points A, B, C, D, E and F by rise and fall.

Apparatus required: Dumpy level, leveling staff, tripod stand, arrows, and pegs.

Procedure:

1) Set up the instrument to cover maximum number of points and do the temporary adjustment.
2) Observe the 1st staff reading on the Bench mark whose reduce level is known. Enter Enter1st reading in the back sight (BS) Column.
3) Take the staff reading on the bench mark, which ever are visible from this set up. Enter it is in the intermediate sight column.
4) Before shifting the instrument take the staff reading on the change point. Enter it on Fore sight.
5) After shifting and setting the instrument in the second instrument station and do temporary adjustment.
6) Take the staff reading on the same change point enter it in the back sight column of the same line
7) Then take the staff reading on the remaining given points and enter it in intermediate sight column.
8) Compute the reduce levels of the point by rise and fall method.
9) In computing rise or fall, the first reading of every point should be taken as positive and second reading of every point should be taken as the negative irrespective of the values.

Tabulation

Reduced Level of the first point =…….

Staff station	B.S	I.S	F.S	Rise	Fall	R.L	Remarks

Calculation

I. Find the level difference between the successive readings & enter this as rise (+ sign), fall (-sign)
II. Then find the R.L by adding the rise and subtracting the fall with the R.L of the previous points.

Arithmetic Check:

∑B.S - ∑ F.S = =∑ Rise - ∑ Fall =Last RL – First RL

Result:

Reduced levels of the points are

Expt No. 10 Date: ----------

CHECK LEVELLING

Aim: To run the check level to find the difference of the given points and also to find the amount of closing error

Apparatus required: Dumpy level, leveling staff, tripod stand, arrows, and pegs.

Procedure: -

1. Setup the instrument at P to cover the maximum points.
2. Do all the initial adjustments.
3. Direct the telescope towards the first point and enter the reading as B.S.
4. Enter the reading of the last visible point from the instrument stations as F.S. and of all other points as I.S.
5. Shift the instrument to Q, set up and level it correctly.
6. Don't change the position until the fore staff reading is taken on the staff held at the last required point.
7. Do the same procedure in the reverse direction and close with the first point.

TABULATIONS:

	Staff Reading			Height of Instrument (m)	R.L. (m)	Remarks
Points	B.S (m)	I.S (m)	F.S.(m)			

Result: -

Closing error =
R.L for the given points =

Expt No. 11 Date: ----------

SQUARE CONTOURING

Aim: To draw the contour map for given area using Square contouring.

Apparatus required: Dumpy level, Tripod, Leveling Staff , Prismatic compass, Chain or Tape, Ranging rods, Arrows, pegs etc.,

General:-

Contour is an imaginary line on the ground joining the points of equal elevation. A contour line is the line on the map representing a contour. Contour interval is the vertical distance between any two consecutive contours.

Procedure:-

1. In this method a number of grid lines of set out at known angular intervals at each station.
2. Points are marked at the ground at convenient distance apart on the rays that are set.
3. Spot levels of these points are determined by leveling.
4. The points are plotted to the scale of the map and spot levels are entered.
5. The contours of desired values are then located by interpolation

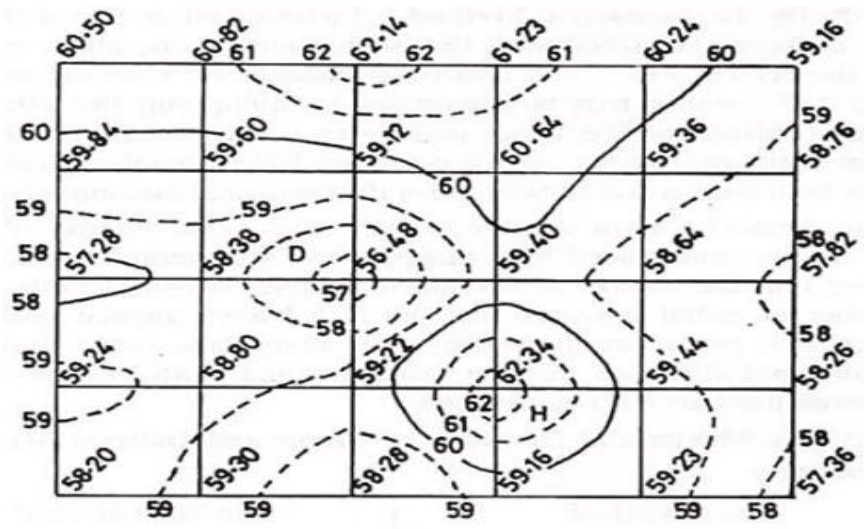

Fig. 8.9

Result:

Thus the Square contouring has been plotted in the graph sheet for given data.

Expt No. 12 Date: ----------

STUDY ON TOTAL STATION

Aim: To study the general introduction of total station survey.

Introduction:

A total station is an electric/optical instrument used in modern surveying. It is also used by archaeologists to record excavations as well as by police, crime scene investigators, private accident deconstructionists and insurance companies to take measurements of scenes.

Furthermore, they can make computations with angle and distance measurements and display the result in real times.

They are used for;

Topographic Surveys

Hydrographic surveys

Cadastral surveys

Construction surveys

The total station is an electric Theodolite (transit) integrated with electric distance meter (EDM) to read distance from the instrument to a particular spatial entity. Some models include internal electric data storage to record distance, horizontal angles, and vertical angle measured, while other models are equipped to write these measurements to an external data collector, which is a hand-held computer.

Angles and distance are measured from total station to points under survey, and the coordinates (X, Y and Z or northing, easting and elevation) of surveyed points relative to the total station position are calculated using trigonometry and triangulation.

Data can be downloading from the total station to a computer and application software used to compute results and generate a map of the surveyed area.

Most modern total station instruments measure angles by means of electro-optical scanning of

extremely precise digital bar-code etched on rotating glass cylinders or disc within the instrument. The best quality total stations are capable angles to 0.5 arc-second. Inexpensive "construction grade" total station generally measure angles to 5 or 10 arc-second.

Measurements of distance is accomplished with a modulated microwave or infrared carrier signal, generated by a small solid- state emitter within the instrument's optical path, and reflectedby prism reflector or object under survey. The modulation pattern in the returning signal is read and interpreted by the onboard computer in the total station. The distance is determined by emitting and receiving multiple frequencies, and determining the integer number of wavelengths to the target for each frequency. Most total stations use purpose-built glass porro's prism reflectors for the EDM signal, and can measure distance to a few kilometers. The typical total station can measures to about 3 millimeters 1/1000th of a foot.

Reflector less total stations can measure distances to any object that is reasonably light in color, to a few hundred meters.

Characteristics of Total Station Instrument:

They combine three basic components:

1. an electric distance measuring
2. an electric angle measuring components
3. a computer or microprocessor

These devices can automatically measure horizontal and vertical angles, as well as slope distance from the single setup.

Parts of a total station instrument

The upper part of total station instrument (alidade) includes

1. Telescope

2. Graduated circle

3. All other elements necessary for measuring angle and distances.

Functions performed by total station instruments

1. In additional to providing guidance to the operator, microprocessors of total stations can perform many different types of computations;
2. Averaging of multiple angle and distance measurements
3. Correcting electronically measured distances for prism constants, atmospheric pressure and temperature.
4. Making curvature and refraction corrections to elevations determined by trigonometric leveling.
5. Reducing slope distances to their horizontal and vertical components.

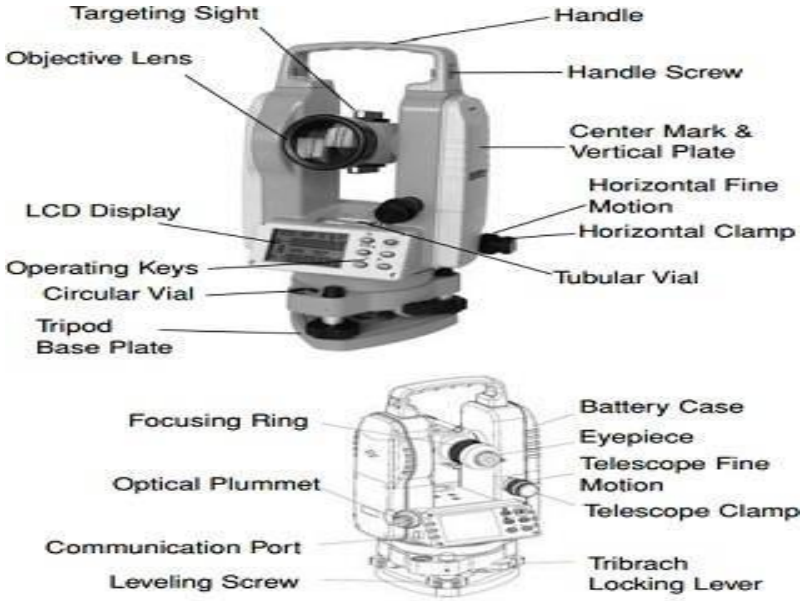

Uses of Total Station:

- The total station instrument is mounted on a tripod and is levelled by operating levelling screws. Within a small range instrument is capable of adjusting itself to the level position. Then vertical and horizontal reference directions are indexed using onboardkeys.
- When target is sighted, horizontal and vertical angles as well as sloping distances are measured and by pressing appropriate keys they are recorded along with pointnumber

Result:

Thus the working of Total station is studied.

Expt No. 13 Date: ----------

DETERMINATION OF DISTANCE AND DIFFERENCE IN ELEVATION BETWEEN TWO INACCESSIBLE POINTS USING TOTAL STATION

Aim: To find the height of a remote point using total station.

Instruments Required: Total station, Prism, Tripod, Pegs

PROCEDURE:

1. Fix the total station over a station and level it
2. press the power button to switch on the instrument.
3. select MODE B -------> S function-------->file management------>create(enter a name) ----->accept
4. Press ESC to go to the starting page
5. Then set zero by double clicking on 0 set(F3)
6. Then go to S function ------> measure-----> rectangular co-ordinate---->station --->press enter.
7. Here enter the point number or name, instrument height and prism code.

PN.....
E.....
N.....
IH.....
PC.....

8. Then press accept (Fs)
9. Setup a reflector vertically beneath the point, the height of which is to be determined.
10. Enter the reflector height, target to it, and measure the distance.
11. Target the high point.
12. The height difference H between the ground point and the high point is now calculated and displayed at the touch of a button

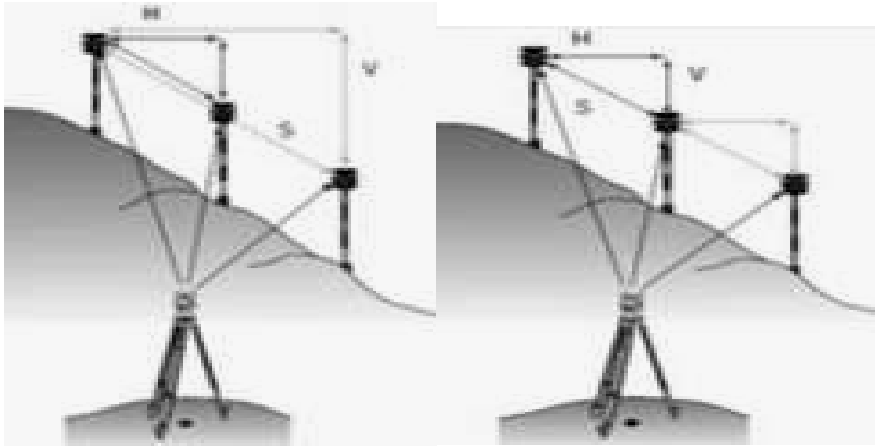

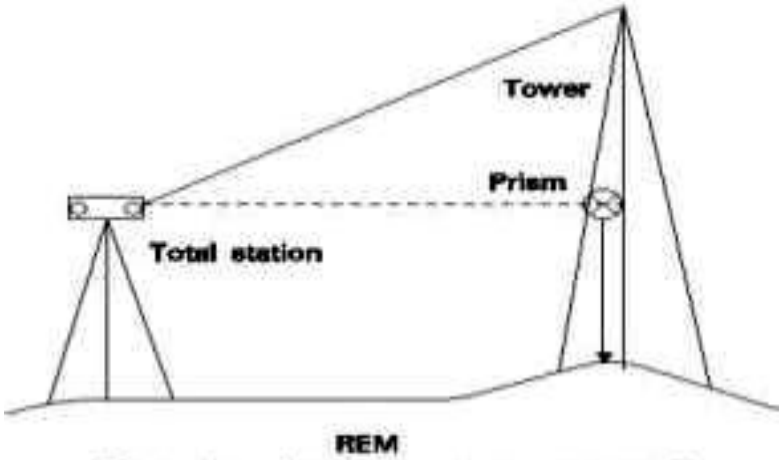

REM
Remote elevation measurement

CALCULATION:

Select S function---> calculation---> 2D surface---->All------> accept

RESULTS:

Select S function---> calculation---> 2D surface---->All------> accept
Height of a remote point using total station is obtained

VIVA QUESTIONS

1. What is the fundamental difference between surveying and leveling?

In surveying the measurements are taken in horizontal plane, but in leveling they are taken in the vertical plane.

2. What is the fundamental difference between plane surveying and geodetic surveying?

In Plane surveying, the curvature of the earth is not considered. But in Geodetic surveying, the curvature of the earth is considered.

3. What do you mean by terms "topographical map" and cadastral map?

A map which shows the natural features of a country such as rivers, hills, roads, railways, villages, towns, etc. is known as topographical map, and one which shows the boundaries of estates, fields, houses, etc. is known as a cadastral map.

4. What is the main principle of surveying?

The fundamental principle of surveying is to work from the whole to the part.

5. How is a chain folded and unfolded?

In order to fold the chain, a chainman moves forward by pulling the chain at the middle so that two halves come side by side. Then he places the pair of links on his left hand with his right hand until the two brass handles appear at the top.

To unfold the chain: A chain man holds the two brass handles in his left hand and throws the bunch with his right hand. Then one chain man stands at a station holding one handle and another chainman moves forward by holding the other handle.

6. In a chaining operation, who is the leader and who is the follower?

The chain man at the forward end of the chain who drags the chain is known as the leader and the one at the rear end of the chain is known as the follower.

7. While chaining a line, if you have to measure through a steep sloping ground, what method should you apply?

The stepping method.

8. Two stations are not intervisible due to intervening high ground. How will you range the line?

The ranging is to be done by the reciprocal method.

9. What do you mean by normal tension?

The tension at which the measured distance is equal to the correct distance (i.e; when sag correction is neutralized by pull correction) is known as normal tension.

10. What do you mean by RF?

The ratio of the distance on the drawing to the corresponding actual length of the object is known as RF.

11. What is the difference between plain scale and diagonal scale?

The plain scale represents two successive units. The diagonal scale represents three successive units.

12. What is hypotenuse allowance?

When one chain length is measured on slopping ground then it shows a shorter distance on the horizontal distance is known as the hypotenusal allowance.

13. How many ranging rods are required to range a line?

At least three ranging rods required for direct ranging and at least four for indirect ranging.

14. What is the length of one link in a 20m chain?

The 20m chain is divided in to 100 links. So, one link is 0.2m. i.e; 20cm. long.

15. What is the Principle of chain surveying?

The Principle of chain surveying is triangulation.

16. What do you mean by triangulation?

The method of dividing an area into a number of triangles is known as triangulation.

17. Why is the triangle preferred to the quadrilateral?

The triangle is preferred just it is a simple figure which can be drawn by just knowing the lengths of its sides.

18. What is the disadvantage of using ill – conditioned triangles?

The apex point of an ill conditioned triangle is not well defined and sharp. This may cause some confusion while marking the actual point correctly on the map.

19. What is reconnaissance survey?

The preliminary inspection of the area to be surveyed is known as reconnaissance survey.

20. What is an index sketch?

During reconnaissance survey a neat hand sketch is prepared showing the frame work of the survey. This sketch is known as index sketch.

21. What is base line of survey?

Base line is the back bone of the survey. The frame work of the survey is prepared on this line.

22. How is the north line of the chain survey map fixed?

The north line of the chain survey map is fixed by taking the magnetic bearings of the base line by prismatic compass.

23. Suppose you are asked to conduct a chain survey in a crowded town what would you say?

In chain survey, whole area is to be divided into a number of triangles. But the formation of triangles is not possible in a crowded area. So I would reject the proposal.

24. What should be the maximum length of the offset?

The maximum length of the offset should be within the length of the tape used. Generally it should not be more than 15m.

25. How is a station marked on the ground?

The station is marked on the ground by a wooden peg and with a cross on the station point.

26. What is the need of a reference sketch?

If the station peg is removed by someone the station can be located accurately with the help of measurements shown in reference sketch.

27. How will you set up a perpendicular with the help of only a chain and tape?

By forming triangle in the ratio 3:4:5 using the chain and tape.

28. Who are the leader and follower when a line is being chained?

The chain man at the forward end of the chain who drags the chain is known as the leader. The one at the rear end of the chain is known as the follower.

29. Why does the field book open lengthwise?

If the field book is opened lengthwise, it becomes easy to maintain the continuation of a chain line.

30. Why is the scale always drawn in the map?

The paper on which the map is drawn may shrink or expand due to various reasons. If the scale is plotted on the map, then it is also reduced or enlarged proportionately. So the distance on the map measured by this scale remains unaltered.

31. What is it necessary to provide tallies in a chain?

Tallies are provided in a chain for the facility to counting some fractional length of the chain, when the full chain length is not required.

32. What do you mean by the term ideal triangle?

An equilateral triangle is said to be ideal.