SRM VALLIAMMAI ENGINEERING COLLEGE

(AN AUTONOMOUS INSTITUTION)

SRM NAGAR, KATTANKULATHUR – 603 203

DEPARTMENT OF CIVIL ENGINEERING

Academic Year 2026 - 2027 / Odd Semester

III Year / V Semester

CE 3566 - HIGHWAY ENGINEERING LABORATORY MANUAL

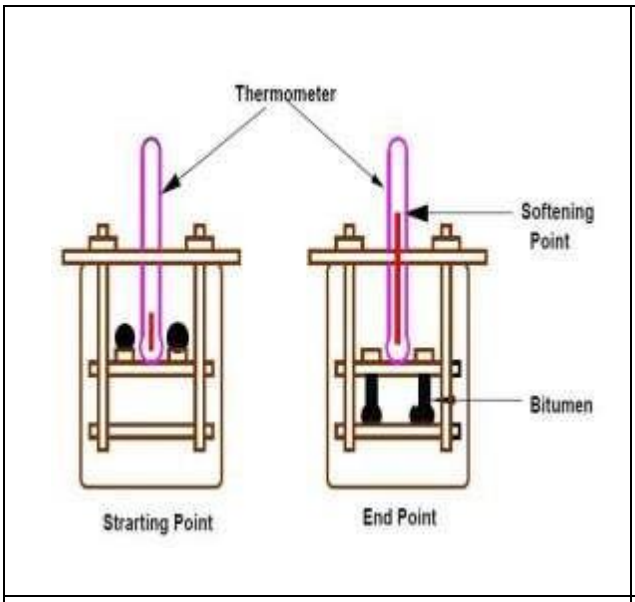

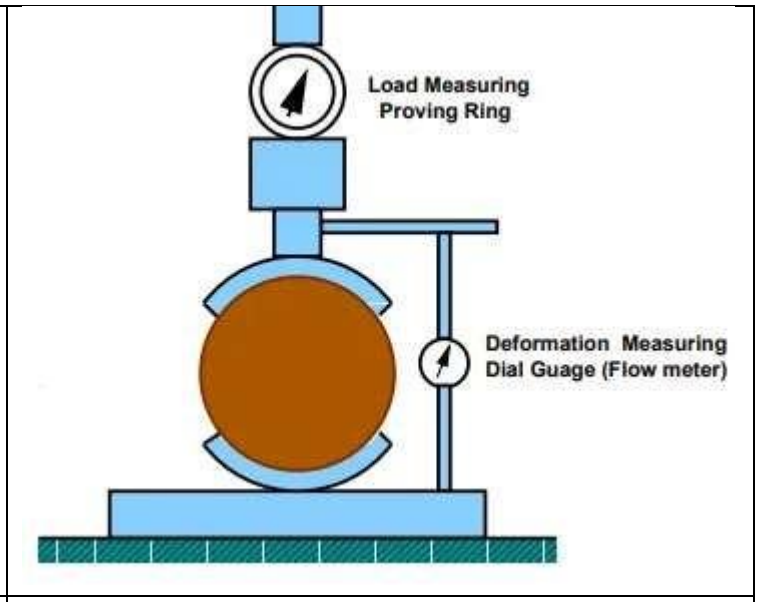

PREFACE

This instruction manual has been prepared by the department of Civil Engineering to facilitate instructions doing practical classes and further to be used as a reference manual by the fifth semester Civil Engineering students of this college. This manual covers explanation of experiments included in the syllabus of the SRM Valliammai Engineering College according to Regulation 2023 Highway Engineering Laboratory (CE3566) for the B.E Civil Engineering degree course.

Mr.N.VINOTH KUMAR.,
Assistant Professor(Sr.G),
Department of Civil Engineering.

Specific Rules and Hazards Associated with this Lab Include

- Students should enter the lab with proper uniform and ID card.
- Always keep work areas clean and tidy.
- Observe safety alerts in the laboratory.
- Always wear shoes that completely cover your feet. No sandals or opened toed shoes are allowed.
- Follow all written and verbal instructions carefully.
- Observe the safety alerts in the laboratory.
- Don’t forget to bring Lab manual, Record, observation, calculator, graph sheet and other accessories when you come to lab.
- In the absence of Instructor no student shall be allowed to work in the laboratory.
- Don’t use mobile phones during lab hours.
- Place tools and equipment in proper place after use.
- Turn off the power switches of weighing balance and equipment after used.
- Report to the staff if any injuries.
- Don’t try to repair any faulty instruments.

SYLLABUS

CE 3566 HIGHWAY ENGINEERING LABORATORY **L T P C**
0 0 4 1.5

OBJECTIVE:

- To learn the principles and procedures of testing of coarse aggregates
- To study about various test on bitumen.
- To enhance the knowledge on properties of fresh concrete.
- To gain the knowledge about the strength properties of hardened concrete.
- To learn about the test on bituminous mixes.

EXCERCISES :

1. TESTS ON AGGREGATES

a) Los Angeles Abrasion Test on aggregates

2. TESTS ON BITUMEN

a) Specific Gravity of Bitumen
b) Penetration Test of Bitumen
c) Viscosity Test of Bitumen
d) Softening Point Test of Bitumen
e) Ductility Test of Bitumen

3. TESTS ON CONCRETE

a) Test for Slump
b) Test for Compaction factor
c) Flow table test of concrete
d) Vee bee Test of concrete
e) Test for Compressive strength - Cube & Cylinder
f) Test for Flexural strength of concrete

4. TESTS ON BITUMINOUS MIXES

a) Stripping Test on bituminous mixes
b) Determination of Binder Content on bituminous mixes
c) Marshall Stability and Flow Values on bituminous mixes (Demonstration)

TOTAL: 45 PERIODS

OUTCOMES:

At the end of the course, the student should be able:

1. To knows the techniques to characterize various pavement materials through relevant tests.
2. To conduct tests on aggregates.
3. To conduct tests on bitumen.
4. To conduct tests on concrete.
5. To classify various mix of bitumen

REFERENCE BOOKS:

1. Highway Materials and Pavement Testing, Nem Chand and Bros., Roorkee, Revised Fifth Edition, 2009.
2. Methods for testing tar and bituminous materials, IS 1201–1978 to IS 1220– 1978, Bureau of Indian Standards.
3. Methods of test for aggregates, IS 2386 – 1978, Bureau of Indian Standards.
4. Mix Design Methods Asphalt Institute Manual Series No. 2, Sixth Edition, 1997, Lexington, KY, USA.
5. N. L. Arora, A Textbook of Transportation Engineering, New India Publication, 1997.

LIST OF EQUIPMENTS FOR A BATCH OF 30 STUDENTS

Sl. No.	Description of Equipment	Quantity
1.	Concrete cube moulds	6
2.	Concrete cylinder moulds	6
3.	Concrete Prism moulds	3
4.	IS Sieves 40 mm,31.5 mm, 25 mm, 20mm, 16mm, 12.5 mm, 10mm, 6.3 mm	2
5.	Concrete Mixer machine	1
6.	Slump cone	3
7.	Flow table	1
8.	Vibrator	1
9.	Trovels and planers	1
10.	UTM – 400 kN capacity	1
11.	Vee Bee Consistometer	1
12.	Pycnometer	2
13.	Bitumen Extractor	1
14.	Los - Angeles abrasion testing machine	1
15.	Marshall Stability Apparatus	1
16.	Compression testing machine	1
17.	Flexure testing machine	1
18.	Ductility Testing Machine	1
19.	IS sieves 12.5 mm, 10 mm and 2.36 mm	2
20.	Oven	1
21.	Tar Viscometer	1
22.	Ring and Ball apparatus	1
23.	Standard Penetrometer (Electrical)	1

List of Experiments

Ex. No.	Date	Name of the Experiment	Marks	Signature	Remarks
		Los Angeles Abrasion Test			
		Specific Gravity of Bitumen			
		Penetration Test of Bitumen			
		Viscosity Test of Bitumen			
		Softening Point Test of Bitumen			
		Ductility Test of Bitumen			
		Test for Slump			
		Test for Compaction factor			
		Flow table test of concrete			
		Vee bee Test of concrete			
		Test for Compressive strength - Cube & Cylinder			
		Test for Flexural strength of concrete			
		Stripping Test on bituminous mixes			
		Determination of Binder Content on bituminous mixes			
		Marshall Stability and Flow Values on bituminous mixes (Demonstration)			

. TESTS ON AGGREGATES

LOS ANGLES ABRASION TEST

Aim:

To determine the abrasion value of given aggregate sample by conducting Los Angles abrasion test.

Apparatus required:

Los Angles apparatus, IS Sieve, Weighting Balance.

Procedure:

1. Clean and dry aggregate sample confirming to one of the grading A to G is used for the test.
2. Aggregate weighing 5kg for grading A, B, C or D and 10 kg for grading E, F or G may be taken as test specimen and placed in the cylinder.
3. The abrasive charge is also chosen in accordance and placed in the cylinder of the machine, and cover is fixed to make dust tight.
4. The machine is rotated at a speed of 30 to 33 revolutions per minute.
5. The machine is rotated for 500 revolutions for grading A, B, C and D, for grading E, F and G, it shall be rotated for 1000 revolutions.
6. After the desired number of revolutions the machine is stopped and the material is discharged from the machine taking care to take out entire stone dust.
7. Using a sieve of size larger than 1.70 mm IS sieve, the material is first separated into two parts and the finer position is taken out and sieved further on a 1.7 mm IS sieve.
8. Let the original weight of aggregate be W_1 gm, weight of aggregate retained on 1.70 mm IS sieve after the test be W_2 gm.

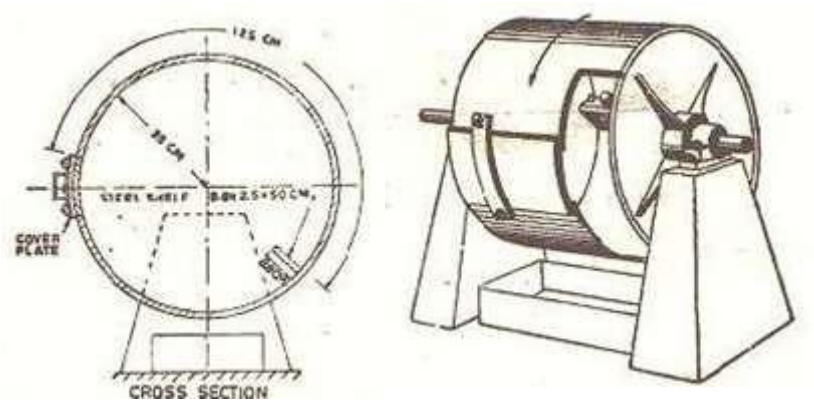

Los Angeles Abrasion Testing Machine

Result:

The average value of Los Angles Abrasion Test is _____%

Observation and Calculation

Sl. No.	Details of Sample	Trial 1	Trial 2	Average
1	Weight of sample, W_1, g			
2	Weight of sample after abrasion test, coarser than 1.70 mm IS sieve W_2, g			
3	Percentage wear = $((W_1 – W_2) / W_1)*100$			

TESTS ON BITUMEN

SPECIFIC GRAVITY TEST FOR BITUMEN

AIM:

To determine the specific gravity of given Bituminous material.

APPARATUS REQUIRED:

Specific gravity bottle, balance and distilled water.

PROCEDURE:

1. The clean, dried specific gravity bottle is weighed let that be W_1 gm
2. Than it is filled with fresh distilled water and then kept in water bath for at least half an hour at temperature $27^oC \pm 0.1^oC$.
3. The bottle is then removed and cleaned from outside. The specific gravity bottle containing distilled water is now weighed. Let this be W_2 gm.
4. Then the specific gravity bottle is emptied and cleaned. The bituminous material is heated to a pouring temperature and the material is poured half the bottle, by taking care to prevent entry of air bubbles. Then it is weighed. Let this be W_3 gm.
5. The remaining space in specific gravity bottle is filled with distilled water at 27^oC and is weighed. Let this be W_4 gm.

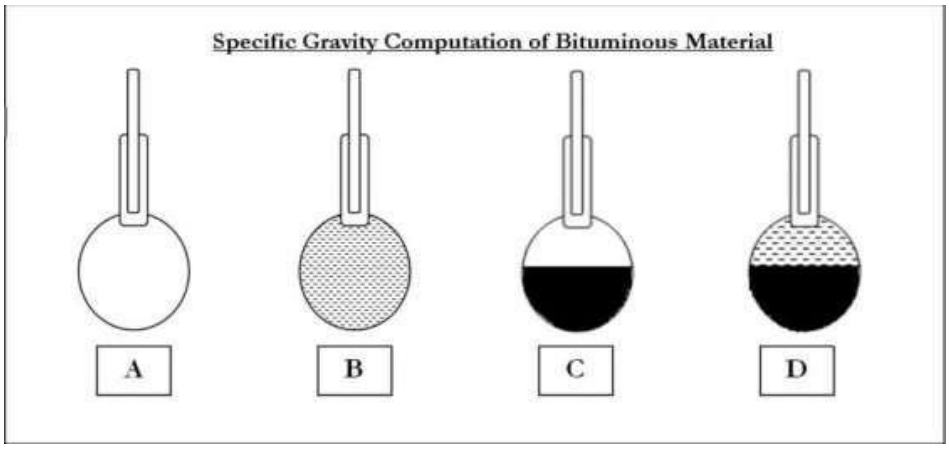

RESULT:

The specific gravity of given bituminous binder is_____

Observation and Calculation

Description		Trial 1	Trial 2
Mass of Pycnometer plus Stopper, g	W_1		
Mass of Pycnometer filled with water, g	W_2		
Mass of Pycnometer partially filled with Bitumen, g	W_3		
Mass of Pycnometer plus Bitumen plus Water, g	W_4		
Specific gravity of bituminous material $= \frac{(W3 - W1)}{(W2 - W1) - (W4 - W3)}$			
Mean Specific Gravity, G			

DETERMINATION OF PENETRATION VALUE OF BITUMEN

AIM:

To determine the consistency of bituminous material

APPARATUS REQUIRED:

Penetrometer, Thermometer, Time measuring device, Transfer dish, Water bath, Needle, Container with a flat bottomed cylindrical metallic dish of diameter 55mm and depth 35mm is required.

PROCEDURE:

1. Soften the material to a pouring consistency at a temperature not more than 60^oC for tars and 90^oC for bitumen above the approximate softening point and stir it thoroughly until it is homogenous and is free from air bubbles and water. Pour the melt into the container to a depth atleast10mm in excess of the expected penetration. Protect the sample from dust and allow it to cool in an atmosphere at a temperature between 15° to 30^oC for one hour. Then place it along with the transfer dish in the water bath at $25.0^o \pm 0.1^oC$ and allow it to remain for 1 to 11/2 hour. The test is carried out at $25.0^o \pm 0.1^oC$, unless otherwise stated.
2. Fill the transfer dish water from the water bath to depth sufficient to cover the container completely. Place the sample in it and put it upon the stand of the penetration apparatus.
3. Clean the needle with benzene, dry it and load with weight. The total moving load required is 100 ± 0.25 gms, including the weight of the needle, carrier and super-imposed weights
4. Adjust the needle to make contact with the surface of the sample. This may be done by placing the needle point with its image reflected by the surface of the bituminous material.
5. Make the pointer of the dial to read zero or note the initial dial reading
6. Release the needle for exactly five seconds.
7. Adjust the penetration machine to measure the distance penetrated.
8. Make at least 3 reading at points on the surface of the sample not less than 10 mm apart and not less than 10 mm from the side of the dish. After each test return the sample and transfer dish to the water bath and wash the needle clean with benzene and dry it. In case of material of penetration greater than 225 three determinations on each of the two identical tests specimens using a separate needle for each determination should be made, leaving the needle in the sample on completion of each determinations to avoid disturbance of the specimen.

RESULT:

The Penetration value of given bitumen is_____mm.

Observation and Calculation

Actual test temperature = °C

Penetration Dial Reading	Trial 1	Trial 2	Trial 3
(a) Initial			
(b) Final			
Penetration value			
Mean Value			

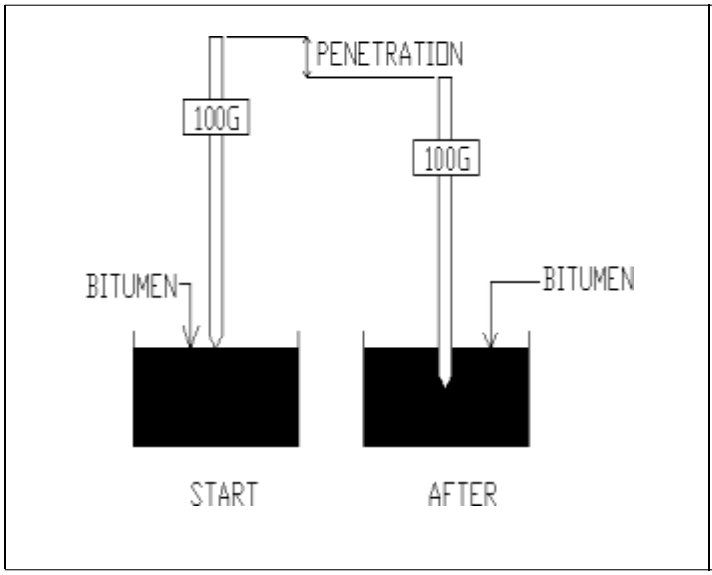

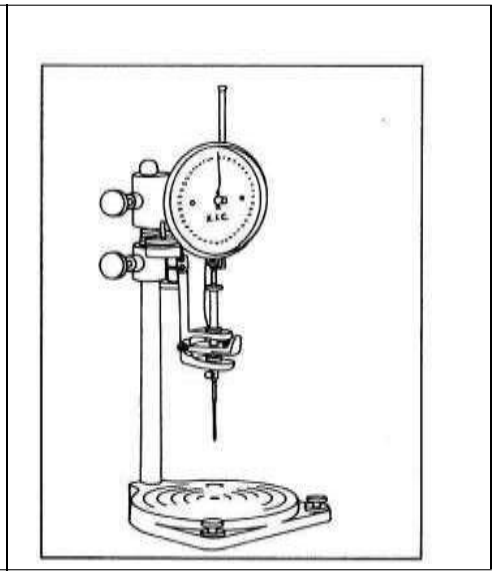

Penetration Test of bitumen

DETERMINATION OF VISCOSITY OF BITUMINOUS MATERIAL

AIM:

To determine the viscosity of bituminous binder.

APPARATUS REQUIRED:

A orifice viscometer (one of 4.0 mm diameter used to test cut back grades 0 and 1 and 10 mm orifice to test all other grades), water bath, stirrer and thermometer.

PROCEDURE:

1. The tar cup is properly levelled and water in the bath is heated to the test temperature.
2. Material is heated to 20°C above the test temperature and material is allowed to cool. During this material is continuously stirred.
3. When the temperature reaches 40°C, it is poured into cup of the Tar Viscometer until leveling peg on valve rod is immersed.
4. Receiver is placed under the orifice.
5. Valve is opened after applying kerosene in the receiver.
6. Stop watch is started when cylinder records 50ml time is recorded for flow upto a mark of 100ml.
7. The time in seconds for 50ml of the test sample to flow through the orifice is the viscosity of the sample at the given test temperature.

RESULT:

The Viscosity value of given bitumen is_____Seconds**.**

Observation and Calculation

Specification	Test 1	Test 2
Test temperature		
Time taken to flow 50 ml of binder		
Viscosity	Seconds	Seconds

DETERMINATION OF SOFTENING POINT OF BITUMINOUS MATERIAL

AIM:

To determine the softening point of bitumen

APPARATUS REQUIRED:

Ring and Ball apparatus, Water bath with stirrer, Thermometer, Glycerin, etc. Steel balls each of 9.5 mm and weight of 2.5 ± 0.08gm.

PROCEDURE.

1. Heat the material to a temperature between 75° – 100°C above its softening point, stir until, it is completely fluid and free from air bubbles and water. If necessary filter it through IS sieve 30.
2. Place the rings, previously heated to a temperature approximating to that of the molten material. On a metal plate which has been coated with a mixture of equal parts of glycerin and dextrin. After cooling for 30 minutes in air, level the material in the ring by removing the excess with a warmed, sharp edged knife.
3. Assemble the apparatus with the rings, thermometer and ball guides in position.
4. Fill the bath with distilled water to a height of 50mm above the upper surface of the rings. The starting temperature should be5^{o}C.
5. Apply heat to the bath and stir the liquid so that the temperature rises at a uniform rate of 5 ± 0.5^{o}C per minute.
6. Note down the temperature when any of the steel ball with bituminous coating touches the bottom plate.

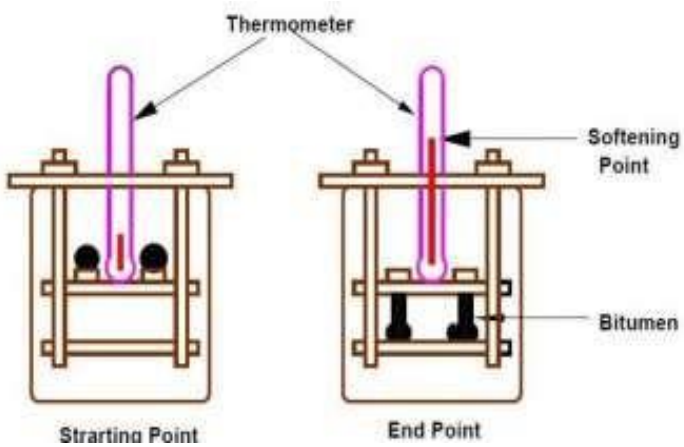

Softening Point Test

RESULT

The Softening Point of the given bituminous material is =

Observation and Calculation

Specification	1	2	Average softening point of bitumen
Temperature when the ball touches bottom °C			

DETERMINATION OF DUCTILITY OF THE BITUMEN

AIM:

1. To measure the ductility of a given sample of bitumen
2. To determine the suitability of bitumen for its use in road construction

APPARATUS REQUIRED:

Briquette mould, (length – 75mm, distance between clips – 30mm, width at mouth of clips – 20mm, cross section at minimum width – 10mm x 10mm), Ductility machine with water bath a pulling device at a pre calibrated rate, a putty knife, thermometer.

PROCEDURE

1. Melt the bituminous test material completely at a temperature of 75°C to 100°C above the approximate softening point until it becomes thoroughly fluid.
2. Strain the fluid through IS sieve 30.
3. After stirring the fluid pour it in the mould assembly and lace it on the brass plate.
4. In order to prevent the material under test from sticking, coat the surface of the plate and interior surface of the sides of the mould with mercury or by a mixture of equal parts of glycerin and dextrin.
5. After about 30 – 40 minutes, keep the plate assembly along with the sample in a water bath. Maintain the temperature of the water bath at 27°C for half an hour.
6. Remove the sample and mould assembly from the water bath and trim the specimen by leveling the surface using a hot knife.
7. Remove the sides of the moulds.
8. Hook the clips carefully on the machine without causing any initial strain.
9. Adjust the pointer to read zero.
10. Start the machine and pull two clips horizontally at a speed of 50mm per minute.
11. Note the distance at which the bitumen thread of specimen breaks.
12. Record the observations in the Performa and compute the ductility value report the mean of two observations, rounded to nearest whole number as the "Ductility Value".

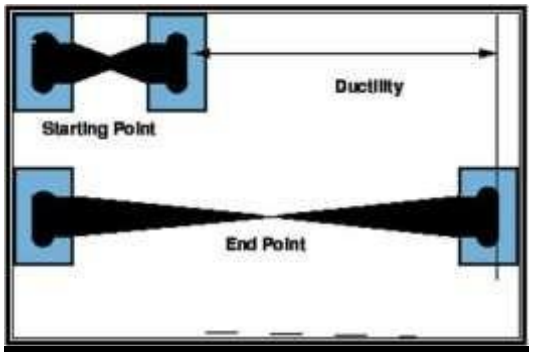

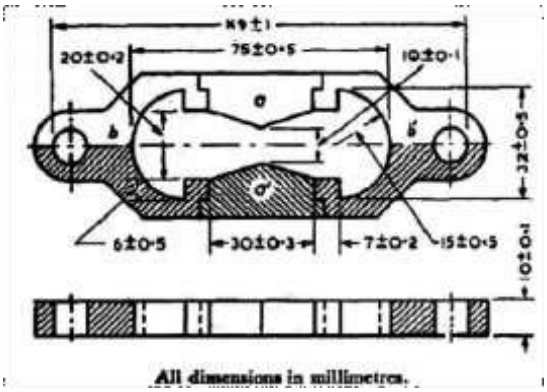

RESULT:

The Ductility value of given bitumen is_____mm.

Observation and Calculation

I	Bitumen grade	=	
II	Pouring temperature °C	=	
III	Test temperature °C	=	
IV	Periods of cooling, minutes	=	

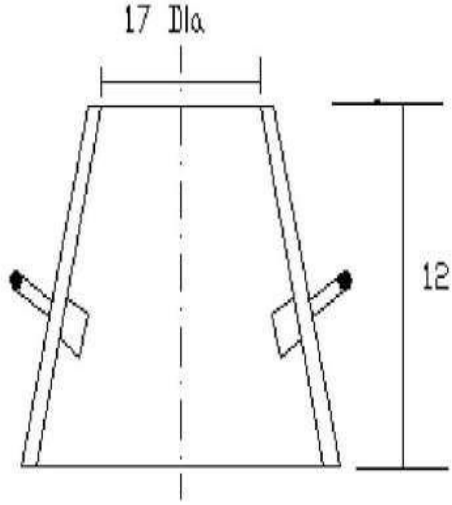

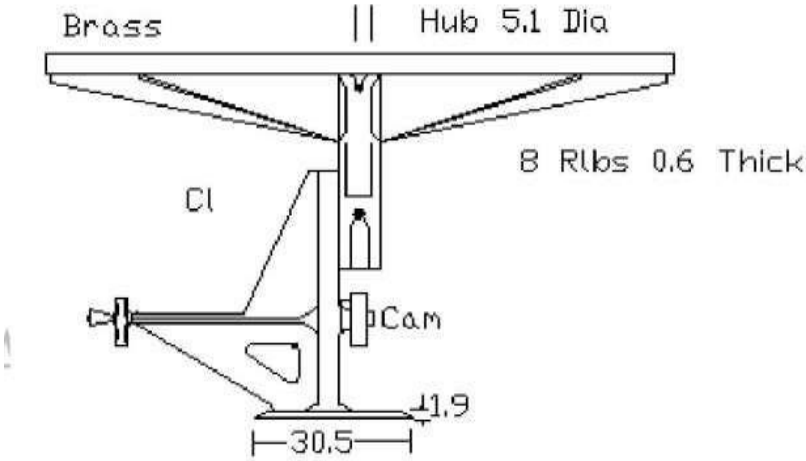

TESTS ON CONCRETE
FLOW TABLE TEST

AIM:

To measure the flow and workability of the concrete by using flow table

APPARATUS REQUIRED:

Flow table test apparatus

PROCEDURE.

The apparatus consists of flow table about 76 cm. in diameter over which concentric circles are marked. A mould made from smooth metal casing in the form of a frustum of a cone is used with the following internal dimensions. The base is 25 cm. in diameter upper surface 17cm. in diameter and height of the cone is 12 cm.

4. The table top is cleaned of all gritty material and is wetted. The mould is kept on the center of the table, firmly held and is filled in two layers.
5. Each layer is rodded 25 times with a tamping rod 1.6cm in diameter and 61cm long rounded at the lower tamping end.
6. After the top layer is rodded evenly the excess of concrete which has overflowed the mould is removed.
7. The mould if lifted vertically upward and the concrete stands on its own without support. The table is then raised and dropped 12.5cm 15times in about 15 seconds.
8. The diameter of the spread concrete is measured in about 6 directions to the nearest 5mm and the average spread is noted. The flow of concrete is the percentage increase in the average diameter of the spread concrete over the base diameter of the mould.
9. The value could range anything from 0 to 150 per cent. A close look at the pattern of spread of concrete can also give a good indication of the characteristics of concrete such as tendency for segregation.

$$\text{Flow, per cent} = \frac{\text{Spread diameter in cm} - 25}{25} \times 100$$

RESULT:

The flow percent of the concrete is _____

VEE-BEE CONSISTOMETER

AIM:

To measure the workability of concrete by Vee-bee consistometer test

APPARATUS REQUIRED:

Vee-Bee consistometer test apparatus

PROCEDURE:

1) Placing the slump cone inside the sheet metal cylindrical pot of the consistometer.
2) The glass disc attached to the swivel arm is turned and placed on the top of the concrete pot
3) The electrical vibrator is switched on and simultaneously a stop watch is started.
4) The vibration is continued till such a time as the conical shape of the concrete disappears and the concrete assumes cylindrical shape.
5) Immediately when the concrete fully assumes a cylindrical shape, the stop watch is switched off. The time required for the the shape of concrete to change from slump cone shape to cylindrical shape in seconds is known as vee bee degree.

Result:

The consistency of the concrete is _____sec.

Observation and Calculation:

Initial reading on the graduated rod, a		
Final reading on the graduated rod, b		
Slump (b) – (a), mm		
Time for complete remoulding, seconds		

FLEXTURE TEST ON HARDENED CONCRETE

AIM:

To determine the strength of the concrete by using flexure test

APPARATUS REQUIRED:

Prism mould, Universal Testing machine.

PROCEDURE:

1. Test specimens are stored in water at a temperature of 24°C to 30°C for 48 hours before testing. They are tested immediately on removal from the water whilst they are still wet condition.
2. The dimension of each specimen should be noted before testing.
3. The bearing surface of the supporting and loading rollers is wiped and clean, and any loose sand or other material removed from the surfaces of the specimen where they are to make contact with the rollers.
4. The specimen is then placed in the machine in such manner that the load is applied to the upper most surface as cast in the mould
5. The axis of specimen is carefully aligned with the axis of the loading device. No packing is used between the bearing surfaces of the specimen and rollers.
6. The load is applied without shock and increasing continuously at a rate of the specimen. The rate of loading is 4kN/min for the 15cm specimen and 18 kN /min for the 10cm specimen.
7. The load is increased until the specimen fails and the maximum load applied to the specimen during the test is recorded

1. If a is greater than 200mm for 150mm specimen or greater than 133mm for 100mm specimen then

$$f_b = Pl / bd2$$

2. If a is less than 170mm for 150mm specimen or less than 133mm but greater than 110mm for 100mm specimen then

$$f_b = 3Pa / bd2$$

Result:

The flexural strength of concrete is _____ N/mm^2

Observation and Calculation

Length of the specimen b/w support (l) =

Breadth of specimen (b) =

Depth of the specimen (d) =

Sl. No.	Specimen id	Date of Casting	Date of Testing	Dist. Of flexure crack from support 'a' mm	Maximum load (p) (Tons)	Modulus of rupture F_b (N/mm^2)
1.						
2.						
3.						

TESTS ON BITUMINOUS MIXES

STRIPPING TEST

Aim:

To determine the stripping value of road aggregates by binders.

Apparatus Requires for Test:

The apparatus required for this experiment are Thermostatically controlled water bath, Oven to heat aggregate, Sieves of sizes 20 mm and 12.5 mm, Beaker of 500 ml capacity and Mixer to mix aggregate and bitumen.

Procedure:

1. 200 g of clean and dry aggregate passing 20 mm IS sieve and retained on 12.5 mm sieve are heated up to 150°C when these are to be mixed with bitumen.
2. Bitumen binder amounting to five percent by weight of aggregate is heated to 160°C.
3. The aggregate and binder are mixed thoroughly till they are completely coated and mixture is transferred to the beaker and allowed to cool at room temperature for about 2 hours.
4. Distilled water is then added to immerse the coated aggregates.
5. The beaker is covered and kept in a water bath maintained at 40°C, for 24 hours.
6. After 24 hours, the beaker is taken out, cooled at room temperature and the extent of stripping is estimated visually while the specimen is still under water.

Result:

The result is reported as the percentage of stone surface that remains coated after the specified periods, the mean value of at least three visually estimated values, being rounded off to the nearest 5 percent.

By visual estimation, stripping value of road aggregates is = _____%

DETERMINATION OF BITUMEN CONTENT BY CENTRIFUGE EXTRACTOR

AIM

To determine quantity of bitumen in hot- mix paving mixtures and pavement samples

APPARATUS REQUIRED

Centrifuge Extractor, Balance of capacity 500 gram and sensitivity 0.01 grams, thermostatically controlled oven with capacity up to 250°C and Beaker for collecting extracted material.

PROCEDURE

1. Weight a 1000 grams sample of asphalt mix.
2. With the fork break the sample down to small pieces and heat the sample to about 115°C.
3. Place the sample in the bowl and weight it.
4. Cover the sample in the bowl with benzene or trichloro ethane and allow it to soak for one hour.
5. Weight filter ring. Place it around the edge of the bowl and clamp a lid on the bowl.
6. Place a beaker under the outlet.
7. Placethebowlinacentrifugeandrotateitgraduallytoincreasethespeedupto 3600rpm.Rotate until the solvent ceases to flow from the outlet.
8. Stop the centrifuge, add 200mlof trichloro ethane or benzene and rotate it again.
9. Repeat the procedure until the extract is no longer cloudy and if fairly light in color.
10. Remove the filter from the bowl and dry in air.
11. Brush the loose particles from the filter into the bowl.
13. 12. Dry the filter to constant weight in a oven 98°Cto 150°C
14. Dry the contents of the bowl on a steam bath and then to constant in an oven at 98°Cto 150°C
15. Obtain the weight of the filter and bowl with dry aggregates.

RESULT

The percentage of the bitumen given sample is %

Observation and Calculation

Before test:

Weight of the bowl + Sample (W1) = grams

Weight of the bowl (W2) = grams

Weight of the Filter (W3) = grams

After test:

Weight of the bowl + Sample (W4) = grams

Weight of the bowl (W5) = grams

Weight of the sample (W1-W2) = grams

Weight of aggregate in bowl (W4-W2) = grams

MARSHALL STABILITY AND FLOW VALUES

AIM

To determine theMarshall Stability and Flow Values of a given bituminous material.

MATERIALS REQUIRED

Breaking Head

Loading Jack

Ring Dynamometer Assembly or Electronic Equivalent

Flow meter

Water Bath

Air Bath

PROCEDURE

1. Equipment Preparation

Thoroughly clean the guide rods and the inside surfaces of the test heads prior to making the test, and lubricate the guide rods so that the upper test head slides freely over them.

2. Sample Preparation

Samples will be prepared in accordance with STP 204-8, Preparation of Marshall Compaction Specimens or collected in accordance with STP 204-5, Asphalt Concrete Samples Obtained by Coring.

3. Test Procedure

1. Bring the specimens prepared with asphalt cement to the specified temperature by immersing in a water bath 30 minutes. Maintain the bath or oven temperature at 60 ± 1o C for asphalt cement specimens. Bring the specimens prepared with asphalt cutback to the specified temperature by placing them in the air bath for a minimum of 2 hours. Maintain the air bath temperature at 25 ± 1o C.
2. The testing head temperature shall be maintained between 20 to 38° C. Remove the specimen from the water bath, oven or air bath and place in the lower segment at the breaking head. Place the upper segment of the breaking head on the specimen and place the complete assembly in position on the testing machine.
3. Place the flow meter, where used, in position over one of the guide rods and adjust the flow meter to zero while holding the sleeve firmly against the upper segment of the breaking head. Hold the flow meter sleeve firmly against the upper segment of the breaking head while the test load is being applied.

4. Apply the load to the specimen by means of the constant rate of movement of the load jack or testing machine head of 50.8 mm/minute until the maximum load is reached and the load decreases as indicated by the dial.
5. Record the maximum load noted on the testing machine or converted from the maximum micrometer dial reading. Release the flow meter sleeve or note the micrometer dial reading, where used, the instant the maximum load begins to decrease.
6. Note and record the indicated flow value or equivalent units in mm if a micrometer dial is used to measure the flow. The elapsed time for the test from removal of the test specimen from the water bath to the maximum load determinations shall not exceed 30 seconds.

RESULTS & CALCULATIONS

4.1. Collection of Test Results

For specimens other than 63.5 mm in thickness correct the load by using the proper multiplying factor from Table 1.

The reports shall include the following information:

a) Type of sample tested (lab sample or pavement core specimen). For core specimens the height of each test specimen in mm shall be reported.

b) Average maximum load in newtons, corrected when required.

c) Average flow value in millimetres.

d) Test temperature

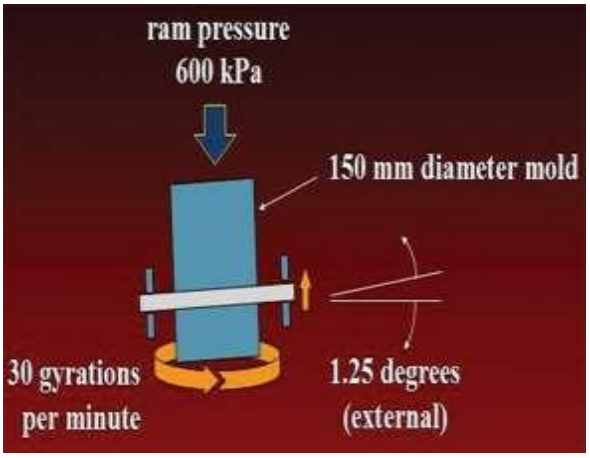

Marshal Stability Test Setup

TABLE 1 - Stability Correlation Ratios*

Volume of Specimen (cm^3)	Thickness of the Specimen (mm)	Correlation Ratio
200 to 213	25.4	5.56
214 to 225	27.0	5.00
225 to 237	28.6	4.55
238 to 250	30.2	4.17
251 to 264	31.8	3.85
265 to 276	33.3	3.57
277 to 289	34.9	3.33
290 to 301	36.5	3.03
302 to 316	38.1	2.78
317 to 328	39.7	2.50
329 to 340	41.3	2.27
341 to 353	42.9	2.08
354 to 367	44.4	1.92
368 to 379	46.0	1.79
380 to 392	47.6	1.67
393 to 405	49.2	1.56
406 to 420	50.8	1.47
421 to 431	52.4	1.39
432 to 443	54.0	1.32
444 to 456	55.6	1.25
457 to 470	57.2	1.19
471 to 482	58.7	1.14
483 to 495	60.3	1.09
496 to 508	61.9	1.04
509 to 522	63.5	1.00
523 to 535	64.0	0.96
536 to 546	65.1	0.93
547 to 559	66.7	0.89
560 to 573	68.3	0.86
574 to 585	71.4	0.83
586 to 598	73.0	0.81
599 to 610	74.6	0.78
611 to 625	76.2	0.76

* The measured stability of a specimen multiplied by the ratio for the thickness of the specimen equals the corrected stability for a 63.5 mm specimen.

VIVA QUESTIONS

1. SPECIFIC GRAVITY ON AGGREGATE

1. **Specific Gravity/Relative Density**
   It is the ratio of the density of the aggregate material to the density of the gas free distilled water at a standard temperature (i.e. 4 ^{o}C). The relative density is a dimensionless quantity and is expressed as oven dried, saturated surface dry and apparent
2. **Oven Dried Specific Gravity**
   It is the ratio of the oven dried density of the aggregate to the density of the gas free distilled water at a standard temperature (i.e. 4 ^{o}C).
3. **Saturated Surface Dry Specific Gravity**
   It is the ratio of the saturated surface dry density of the aggregate to the density of the gas free distilled water at a standard temperature (i.e. 4 ^{o}C).
4. **Apparent Specific Gravity**
   It is the ratio of the apparent density of the aggregate to the density of the gas free distilled water at a standard temperature (i.e. 4 ^{o}C).
5. **Application of this test**
   This method determines (after 24 hours in water) the bulk specific gravity and the apparent specific gravity, the bulk specific gravity on the basis of weight of saturated surface dry aggregate and the absorption.
6. **What is the recommended value of specific gravity as per codes?**
   The specific gravity of aggregates normally used in road constructionranges from about 2.5 to 3.0 with an average of about 2.68.
7. **What is the formula to calculate Specific gravity**
   Specific gravity = (dry weight of the aggregate /Weight of equal volume of water)
8. **What is the formula to Apparent specific gravity**
   Apparent specific gravity = (dry weight of the aggregate/Weight of equal volume of water excluding air voids in aggregate)

2. ABRASION VALUE OF AGGREGATE

1. **What is the purpose of abrasive test?**
   To find out the abrasive of coarse aggregate.
2. **What is the limitation of abrasive test?**
   The standard limitation by not exceed 16%.
3. **List the equipment's required for this test**
   Los Angeles Machine, six to twelve balls are required,Sieve ,Balance of capacity 5kg or 10kg,Drying oven,Miscellaneous like tray
3. **What are the IS sieve required for conduting this test.**
   1.70, 2.36,4.75,6.3,10,12.5,20,25,40,50,63,80 mm IS Sieves.
4. **What is the standard IS codes for this test.**
   IS: 2386 (Part IV) – 1963
5. **What is Los Angeles Abrasion Value**
   The percentage wear of the aggregates due to rubbing with steel balls is determined and is known as Los Angeles Abrasion Value.

6. What is the recommended value for conducting this test.

Sl. No.	Type of Pavement	Max. permissible abrasion value in %
1	Water bound macadam sub base course	60
2	WBM base course with bituminous surfacing	50
3	Bituminous bound macadam	50
4	WBM surfacing course	40
5	Bituminous penetration macadam	40
6	Bituminous surface dressing, cement concrete surface course	35
7	Bituminous concrete surface course	30

3. WATER ABSORPTION TEST ON AGGREGATES

1. **What is Absorption?**

It is the increase in the mass of the aggregate due to the penetration of water into the pores of the particles during a prescribed period of time. The term absorption does not include the amount of water adhering to the surface of the particles. Water absorption is expressed as percentage of the dry mass.

2. **What is Apparent Density?**

It is the mass per unit volume of the impermeable portion of the aggregate particles.
OR
It is the mass per unit volume of the solid portion of the particles excluding the voids.

3. **What is the purpose of this test?**

   i. To find out the porous of aggregate.
   ii. Durability of aggregate/concrete.

4. **What is the limitations of this test?**

The standard limitations for 0.5 to 1%.

5. **What is meant by water absorption?**

The ratio between wet aggregate and dry aggregate for same weights.If presents by percentage.

6. **What apparatus is required for water absorption test**

Wire basket – perforated, electroplated or plastic coated with wire hangers for suspending it from the balance, Water-tight container for suspending the basket, Dry soft absorbent cloth – 75cm x 45cm (2 nos.), Shallow tray of minimum 650 sq.cm area, Air-tight container of a capacity similar to the basket and Oven.

7. **How long the aggregate should be placed in water for conducting this test.**

The basket and sample should remain immersed for a period of 24 + ½ hrs afterwards.

4. SPECIFIC GRAVITY TEST ON BITUMEN

1. **What are the factors influencing specific gravity and density of bituminous mixtures.**

   i. Composition of the mixture in terms of types
   ii. Amounts of aggregates
   iii. Bituminous materials.

2. **What is the formula to calculate the maximum specific gravity of bituminous mixtures.**

$$\text{Maximum Specific Gravity} = \frac{B}{A + B - C - \frac{A}{V_c}}$$

3. **What is the formula to calculate the density of bituminous mixtures.**

$$\text{Density} = (\text{Maximum Specific Gravity})\ \gamma$$

4. **What is the use of this test?**
   I. Percentage of air voids in compacted bituminous paving mixtures.
   II. To calculate the target values for the compaction of paving mixtures.
   III. To calculate the amount of bitumen absorbed by the internal porosity of the individual aggregate particles in a bituminous paving mixture.

5. **At what temperature the aggregate should be dried in oven for preparing the sample?**
   110 6 5°C [230 6 9°F]

6. **At what temperature the water bath should be maintained?**
   25°C

7. **At what temperature the specific gravity and density of bituminous mixture value is determined?**
   25°C

8. **Define specific gravity**
   The ratio of a given mass of material at 25°C [77°F] to the mass of an equal volume of water at the same temperature.

9. **What is the scope of this test**
   This test method covers the determination of maximum specific gravity of and density of uncompacted bituminous paving mixtures at 25°C [77°F].

5. PENETRATION TEST

1. **How will you express the Penetration**
   Consistency of a bituminous material expressed as the distance in tenths of a millimeter that a standard needle vertically penetrates a sample of the material under known conditions of loading, time, and temperature.

2. **What are the different grades of bitumen:**
   Bitumen is usually characterized in the following three types of grades;
   i. Viscosity grades
   ii. Penetration grades
   iii. Density grades

3. **What is scope and significance**
   i. The penetration test is used as a measure of consistency. Higher values of penetration indicate softer consistency.
   ii. The test is widely used all over the world for classifying bituminous materials into different grades.
   iii. Depending upon the climatic conditions and type of construction, bitumen of different penetration grade are used. Commonly used grades are 30/40, 60/70 and 80/100.

iv. In warmer regions, lower penetration grades are preferred and in colder regions bitumen with higher penetration values are used.

v. The test is not intended to estimate consistency of softer materials like cut back which are usually graded by viscosity test.

4. Explain the specification for Penetration Apparatus

Any apparatus that permits the needle holder (spindle) to move vertically and capable of indicating the depth of penetration to the nearest 0.1 mm, will be acceptable. The weight of the spindle shall be 47.5 ± 0.05 gram. The total weight of the needle and spindle assembly shall be 50.0 ±0.05 grams.

5. Explain the specification for Penetration Needle

The needle shall be made from fully hardened and tapered stainless steel. The standard needle shall be approximately **50** mm in length. The diameter of needle shall be **1.00 to 1.02** mm. The needle shall be rigidly mounted in the ferrule. The weight of the ferrule needle assembly should be **2.50 ± 0.05** grams.

6. Explain the specification for Sample Container

A metal or glass cylindrical, flat-bottom container of the following dimensions shall be used.

PENETRATION	DIAMETER (mm)	INTERNAL DEPTH (mm)
< 200	55	35
Between 200 & 350	55	70

7. Explain the specification for Water Bath

A bath having a capacity of at least 10 Liter and capable of maintaining a temperature of 25 ± 0.1 °C or other temperature of test within 0.1 °C.

8. What is the test conditions

Where the conditions of test are not specifically mentioned, the temperature, load, and time are understood to be 25 °C, 100 gram, and 5 seconds, respectively. Other conditions may be used for special testing, such as the following:

TEMPERATURE (°C)	LOAD (gm.)	TIME (sec)
0	200	60
4	200	60
45	50	5
46.1	50	5

In such cases the specific conditions of test shall be reported.

9. What do you understand by the term 30/40 bitumen?

30/40 is the term used to specify the grade of the bitumen

10. What are the precautions to be taken while conducting a penetration test?

(i) There should be no movement of the container while needle penetrates into sample.

(ii) The sample should be free from any extraneous matter.

(iii) The needle should be cleaned with benzene and dried before penetration.

6. ISCOSITY

1. **Explain the term viscosity?**

   Viscosity denotes the fuid property of bituminous material and it is a measure of resistance to flow.

2. **What is the theory and scope of this test?**

   i. At high fluidity or low viscosity, the bitumen binder simply "lubricates" the aggregate particles instead of providing a uniform film thickness for binding action.

   ii. Similarly, low fluidity or high viscosity does not enable the bitumen to coat the entire surface of aggregates.

3. **What is the effect of temperature on viscosity**

   Effect of temperature on viscosity Viscosity of lubricating oil is inversely proportional to the temperature i.e. with increase of temperature, viscosity decreases.

4. **Define Viscosity Index?**

   Viscosity generally decreases with increase in temperature.The maintenance of viscosity over the range of temperature is called the viscosity Index (V.I)

5. **What are the precautions to be done while doing this test**

   The working range of the instrument with the 10mm cup is such that the time of efflux shall be between 10 and 140 seconds.

6. **What is the advantage of using Viscosity test?**

   The advantage of using the viscosity test as compared with the penetration test is that the viscosity test measures a fundamental physical property rather than an empirical value

7. **What apparatus is required for viscosity test.**

   Tar viscometer 4mm and 10mm orifices.this apparatus consists of main parts like cup,valve, water bath,sleeves,stirrer,receiver and thermometers,etc.

8. **What is the code used for conducting this test**

   IS 1206-1978

7. SOFTENING POINT TEST

1. **Significance of Softening point test**

   Bitumens are viscoelastic materials without sharplydefined melting points; they gradually become softer and lessviscous as the temperature rises. For this reason, softeningpoints must be determined by an arbitrary and closely definedmethod if results are to be reproducible.

2. **What is the scope of softening point of bitumen**

   Bitumen does not suddenly change from solid to liquid state, but as the temperature increase, it gradually becomes soften until it flows readily. The softening point is the temperature at which the substance attains particular degree of softening under specified condition of test.

3. **List the apparatus required for conducting softening point test**

Ring and Ball apparatus, Water bath with stirrer, Thermometer, Glycerin, etc. Two Steel balls.

4. **What is the specification of steel balls used for softening point test?**

Steel balls each of9.5mm and weight of2.5±0.08gm.

5. What are the factors which affect the ring and ball test results? 2.
6. **What is softening point?**

   Softening point denotes the temperature at which the bitumen attains a particular degree of softening under the specifications of test.
7. **How the sample is prepared for softening point test?**
   i. The sample should be just sufficient to fill the ring. The excess sample should be cut off by a knife.
   ii. Heat the material between 75 and 100°C. Stir it to remove air bubbles and water, and filter it through IS Sieve 30, if necessary.
   iii. Heat the rings and apply glycerine. Fill the material in it and cool it for 30 minutes.
   iv. Remove excess material with the help of a warmed, sharp knife.

8. **What is the use of Softening point test?**
   i. The softening point is useful in the classification of bitumens
   ii. Indicative of the tendency of the material to flow at elevated temperatures encountered in service.

8.DUCTILITY

1. **Define Ductility?**

   Ductility is the property of bitumen that permits it to undergo great deformation or elongation
2. **List the factors that affect the result of a ductility test.**
   1. Pouring temperature
   2. Test temperature
   3. Rate of pulling
3. **What do you understand by the term repeatability and reproducibility?**
   1. Reproduceability will deal with the variation between repeated TRIALS of the experiments. If everyone in a class is doing the same experiment, then you would compare results among each person's results.
   2. Repeatability is variation within one experiment. Reproducability is the variation among multiple experiments.
4. **What temperasture should be maintained in water bath for conducting ductility test?**

   The test is conducted at 27°±O.5°C and a rate of pull of 50±2.5 mm per minute.
5. **What is the minimum ductility value specified by the code**

   75cm
6. **List the apparatus required for ductility test?**
   i. Briquette mould
   ii. Water bath
   iii. Testing machine

iv. Thermometer – Range 0 to 44°C, Graduation 0.2^{o}C

7. **Give the specification for Briquette mould?**

Length - 75mm, distance between clips - 30mm,
Width at mouth of clips- 20mm,
Cross section at minimum width - lOmm x lOmm)

8. **What is the use of ductility test**

In flexible pavement design, it is necessary that binder should form a thin ductile film around aggregates so that physical interlocking ofthe aggregates is improved.

9. **What are the precautions to be taken while conducting a ductility test**

i. The plate assembly upon which the mould is placed shall be perfectly flat and level so that the bottom surface of the mould touches it throughout.
ii. In filling the mould, care should be taken not to distort the briquette and to see that no air pocket is within the moulded sample.

9. STRIPPING TEST

1. **What is the stripping test of aggregates?**
The coating of aggregate by bitumen at 150°C for keeping 1 hour in oven, visually assessment only required for results explanations.
2. **What is the stiffness (Rigidity) and how it to calculate?**
Stiffness is caused that where low penetration asphalt is used. Such low penetration asphalt causes the volume changes making the pavement rigid; such asphalt mixes give higher stability values and low flow values.
Stiffness = Stability/Flow
3. **What is the asphalt?**
Ans. A dark brown to black cementatious material which the predominating constituents are bitumen's which occur in nature or are obtained in petroleum processing.
4. **What are the main function of Base and Sub base in asphalt?**
Base and sub base are structural elements of the pavement, in conjunction with the overlying asphalt surface, their purpose is to distribute traffic wheel loads over the sub grade or foundation, to perform this function base and sub base must be built with necessary internal strength properties, In this respect full depth asphalt pavement have a special advantage over pavements with granular bases.
5. **What is the purity of asphalt?**
Asphalt cement is composed almost more than 99.5% bitumen, which by definition is soluble in carbon disulphide.
6. **What are the "Air voids"?**
The total volume of small pockets of air between the coated aggregate particles throughout a compacted paving mixture.

10. DETERMINATION OF BINDER CONTENT

1. **List the apparatus required for this test**

i. Centrifuge
ii. Balance of capacity 500 gram and sensitivity 0.01grams.
iii. Thermostatically controlled oven with capacity up to 250°C
iv. Beaker for collecting extracted mate

2. **How will you report the results.**

The result obtained shall be reported as the percentage of binder content in the mix to

the nearest second decimal.

3. **What is the maximum speed for centrifuge for conducting the test**

Run the centrifuge slowly and then gradually increase the speed to a maximum of 3600 rpm.

4. **How much quantity of sample should be taken for this test.**

Take exactly 500 grams of representative sample and place in the bowl of extraction apparatus

5. **How will you calculate the binder content?**

Bitumen content = [(A-B)/B]×100 %

A=Weight of sample taken

B=Weight of extracted sample

6. **What are the precautions to be taken while conducting this test.**

   i. Solvents should be used only under a hood or with an effective surface exhaust system in a well-ventilated area, since the solvents are all toxic to some degree.
   ii. Respiratory protection is required if airborne concentration exceeds TLV (Threshold Limit Value). Air respirators for organic fumes are advised.

11. MARSHAL STABILITY AND FLOW VALUES

1. **What is the application of this test.**

The testing section of this method can also be used to obtain maximum load and flow for asphalt concrete specimens cored from pavements or prepared, Preparation of Marshall Compaction Specimens.

2. **What is the unit for stability and flow values.**

Stability is measured in Newtons. Flow is measured in mm.

3. **What are the information the reports should contain.**

   i. Type of sample tested (lab sample or pavement core specimen). For core
   ii. Specimens the height of each test specimen in mm shall be reported.
   iii. Average maximum load in newtons, corrected when required.
   iv. Average flow value in millimetres.
   v. Test temperature

4. **List the equipments required for conducting this test.**

Breaking Head, Loading Jack, Ring Dynamometer Assembly, Flowmeter, Water Bath and Air Bath

5. **What is the description of this test**

This method covers the measurement of resistance to plastic flow of cylindrical specimens of asphalt mixtures loaded on the lateral surface by means of the Marshall apparatus. This method is for use with mixtures containing asphalt cement, asphalt cutback, and aggregate up to 25.4 mm maximum size.

6. **What is the specification for water bath used in this test.**

The water bath shall be at least 152 mm deep and shall be thermostatically controlled so as to maintain the bath at 60 ± 1o C.

7. **What is the specification for Ring Dynamometer Assembly**

One ring dynamometer of 2267kg capacity and sensitivity of 4.536 kg up to 453.6 kg and 11.34 kg between 453.6 and 2267 kg shall be equipped with a micrometer dial. The micrometer dial shall be graduated in 0.0025 mm.

TOPIC BEYOND SYLLABUS

SLUMP-FLOW AND T_{500} TIME FOR SELF-COMPACTING CONCRETE

Aim

To determine the slump flow and T_{500}timefor self-compacting concrete.

Principle

The slump-flow and T_{500} time is a test to assess the flowability and the flow rate of self-compacting concrete in the absence of obstructions The result is an indication of the filling ability of self-compacting concrete. The T_{500} time is also a measure of the speed of flow and hence the viscosity of the self-compacting concrete.

Apparatus

- Baseplate
- Ruler
- Stop watch

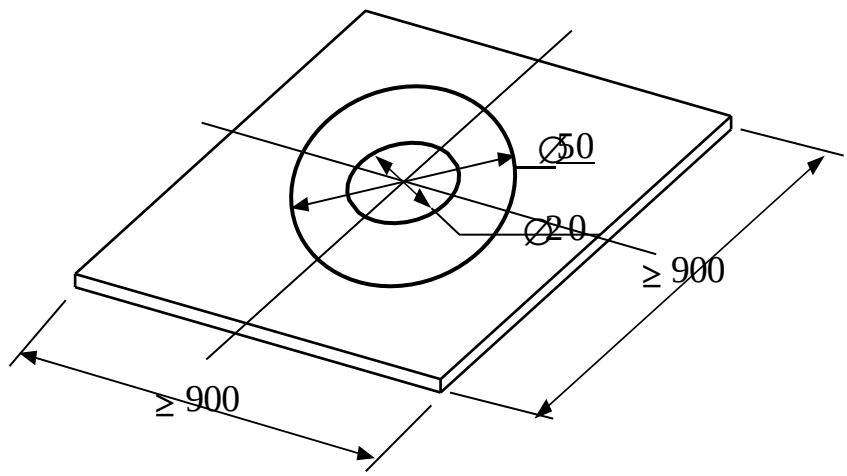

Figure 1. Baseplate

Procedure

- Prepare the cone and baseplate.
- Place the cone coincident with the 200 mm circle on the baseplate and hold in position by standing on the foot pieces, ensuring that no concrete can leak from under the cone.
- Fill the cone without any agitation or rodding, and strike off surplus from the top of the cone. Allow the filled cone to stand for not more than 30s; during this time remove any

spilled concrete from the baseplate and ensure the baseplate is damp all over but without any surplus water.

- Lift the cone vertically in one movement without interfering with the flow of concrete.
- For T_{500} time, start the stop watch immediately the cone ceases to be in contact with the baseplate and recordthe time taken to the nearest 0.1 s for the concrete to reach the 500 mm circle at any point. Without disturbing the baseplate or concrete, measure the largest diameter of the flow spread and record as d_m to the nearest 10 mm. Then measure the diameter of the flow spread at right angles to d_m to the nearest 10 mm and record as d_r to the nearest 10 mm.
- Check the concrete spread for segregation. The cement paste/mortar may segregate from the coarse aggregate to give a ring of paste/mortar extending several millimetres beyond the coarse aggregate. Segregated coarse aggregate may also be observed in the central area. Report that segregation has occurred and that the test was therefore unsatisfactory.

Result

The slump-flow is the mean of d_m and d_r expressed to the nearest 10 mm.

The T_{500} time is reported to the nearest 0.1 s.

V-FUNNEL TEST

Aim

To assess the viscosity and filling ability of self-compacting concrete.

Principle

A V shaped funnel is filled with fresh concrete and the time taken for the concrete to flow out of the funnel is measured and recorded as the V-funnel flow time.

Apparatus

- V-funnel,
- Container
- Stop watch
- Straight edge, for striking off concrete level with the top of the funnel.

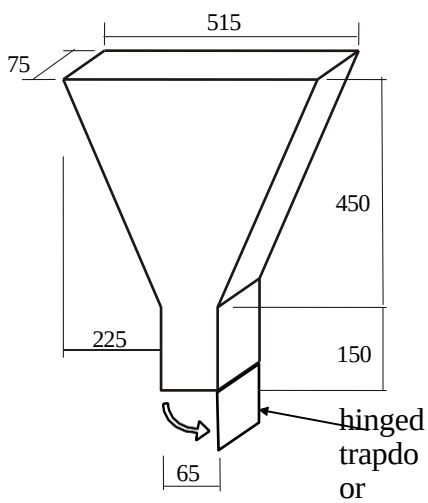

Figure 2– V funnel

Procedure

- Clean the funnel and bottom gate, the dampen all the inside surface including the gate.
- Close the gate and pour the sample of concrete into the funnel, without any agitation or rodding, then strike off the top with the straight edge so that the concrete is flush with the top of the funnel.
- Place the container under the funnel in order to retain the concrete to be passed. After a delay of (10 ± 2) s from filling the funnel, open the gate and measure the time t_v, from opening the gate to when it is possible to see vertically through the funnel into the container below for the first time. $t_v$is the V-funnel flow time.

Result

The flow time of the given sample is ……. S

L-BOX TEST

Aim

To determine the passing ability of self-compacting concrete.

Theory

The L-box test is used to assess the passing ability of self-compacting concrete to flow through tight openings including spaces between reinforcing bars and other obstructions without segregation or blocking.

Principle

A measured volume of fresh concrete is allowed to flow horizontally through the gaps between vertical, smooth reinforcing bars and the height of the concrete beyond the reinforcement is measured.

Apparatus

- L-box,
- Ruler
- Container

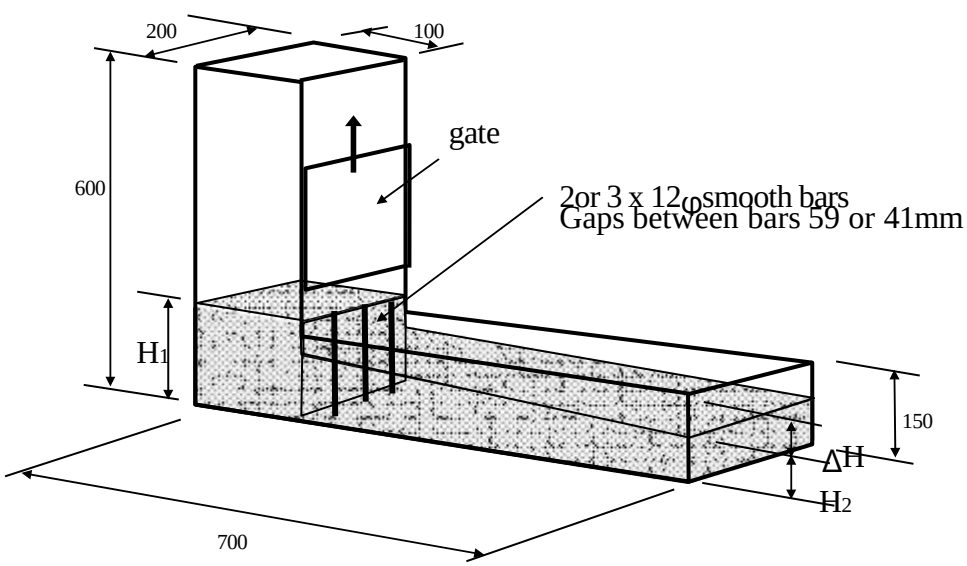

All dimensions are in mm

Figure 3– General assembly of L-box

Test procedure

- Support the L-box on a level horizontal base and close the gate between the vertical and horizontal sections.
- Pour the concrete from the container into the filling hopper of the L-box and allow to stand for (60 ± 10) s.
- Record any segregation and then raise the gate so that the concrete flows into the horizontal section of the box.
- When movement has ceased, measure the vertical distance, at the end of the horizontal section of the Lbox, between the top of the concrete and the top of the horizontal section of the box at three positions equally spaced across the width of the box.
- By difference with the height of the horizontal section of the box, these three measurements are used to calculate the mean depth of concrete as H2 mm.
- The same procedure is used to calculate the depth of concrete immediately behind the gate as H1 mm.

Result

The passing ability PA is calculated from the following equation.

$$PA = H2/H1$$

J RING TEST

Aim

To determine the passing ability of Self Compacting Concrete

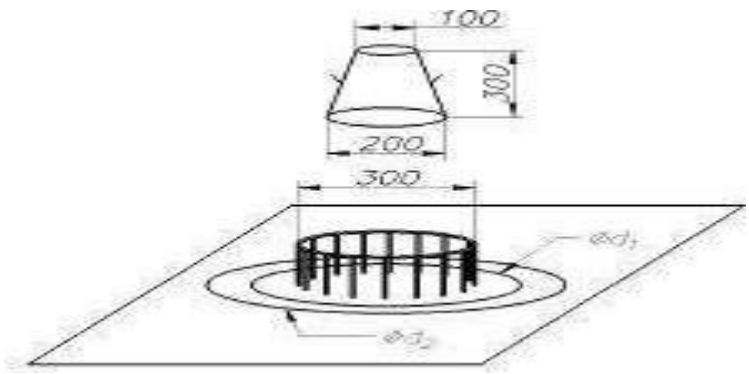

Figure 4 J ring set up

Apparatus

- Mould,
- base plate
- trowel
- scoop
- ruler

Procedure

- About 6 litre of concrete is needed to perform the test, sampled normally.
- Moisten the base plate and Place the JRing centrally on the base-plate and the and the slump-cone centrally inside it and hold down firmly.
- Fill the cone with the scoop. Do not tamp, simply strike off the concrete level with the top of the cone with the trowel. Remove any surplus concrete from around the base of the cone.
- Raise the cone vertically and allow the concrete to flow out freely.
- Measure the final diameter of the concrete in two perpendicular directions.
- Calculate the average of the two measured diameters. (in mm).
- Measure the difference in height between the concrete just inside the bars and that just outside the bars.
- Calculate the average of the difference in height at four locations (in mm).

Result

The passing ability of the given sample is found to be …..mm.