SRM VALLIAMMAI ENGINEERING COLLEGE

(An Autonomous Institution)

SRM NAGAR, KATTANKULATHUR – 603 203.

DEPARTMENT OF ELECTRICAL AND ELECTRONICS ENGINEERING

(Common to EIE & MDE)

LABORATORY MANUAL

EI3365 – ELECTRON DEVICES AND CIRCUITS LABORATORY

Regulation - 2023

Semester/Branch	**:**	**III semester / EEE**
Academic Year	**:**	**2026 -27 ODD**
Prepared By	**:**	**Dr. R. Issan Raj, Assistant Professor A.P(Sr.G)/EIE**
		Ms. V. P. Sandhya, Assistant Professor A.P(Sr.G)/MDE
		Mr. S. Balaji, Assistant Professor (Sr.G)/EEE

SRM VALLIAMMAI ENGINEERING COLLEGE

(An Autonomous Institution)

SRM Nagar, Kattankulathur – 603 203

VISION OF THE INSTITUTE

Educate to excel in social transformation

MISSION OF THE INSTITUTE

- To contribute to the development of human resources in the form of professional engineers and managers of international excellence and competence with high motivation and dynamism, who besides serving as ideal citizen of our country will contribute substantially to the economic development and advancement in their chosen areas of specialization.
- To build the institution with international repute in education in several areas at several levels with specific emphasis to promote higher education and research through strong institute-industry interaction and consultancy.

DEPARTMENT VISION

To accomplish and maintain international eminence and to contribute to become a model institution for higher learning through development of highly competent and dynamic Electrical and Electronics Engineers while remaining sensitive to ethical, societal and environmental issues.

DEPARTMENT MISSION

1. To mould Electrical and Electronics Engineers and Entrepreneurs of international excellence as global leaders capable of contributing towards technological innovations, economic growth and environmental safety.
2. To transform the Department into centre of excellence in the domain of Electrical and Electronics engineering by promoting research and development, consultancy work and industry- institute interaction activities.

SYLLABUS

EI3365 –ELECTRON DEVICES AND CIRCUITS LABORATORY

OBJECTIVES:

The student should be made:

- To understand the behavior of semiconductor devices and rectifiers experimentally.
- To understand the behavior of semiconductor devices and rectifiers experimentally.
- To get familiarized on JFET, SCR and UJT.
- To design the amplifiers.
- To develop oscillators.

LIST OF EXPERIMENTS

1. Characteristics of PN Junction diode.
2. Single phase half wave and full wave rectifiers with capacitive filters.
3. Characteristics of Zener diode and Zener as series voltage regulator.
4. Characteristics of photo diode, Study of light activated relay circuit.
5. Characteristics of Bipolar Junction Transistor under common emitter configuration.
6. Characteristics of BJT under common base configuration.
7. Characteristics of JFET.
8. Study the characteristics of SCR.
9. Study the Characteristics of UJT and generation of saw tooth waveforms.
10. Differential amplifiers using FET.
11. Design and testing of Feedback amplifiers (Any one type)
12. Design and testing of RC phase shift, LC oscillators.
13. Simulation of rectifier circuits using SIMULINK.

TOTAL: 45 PERIODS

OUTCOMES:

At the end of the course, the student should be able to:

1. Determine the Breakdown voltage, forward and reverse resistance of PN junction diode and Zener diode and Calculate the ripple factor of rectifier circu
2. Analyze the characteristics of BJT under CE and CB configuration.
3. Obtain the UJT, SCR and JFET parameters from the characteristics.
4. Design the RC and LC tuned oscillators for a given oscillating frequency and develop feedback amplifiers.

LIST OF EXPERIMENTS

CYCLE-I

1. Characteristics of PN Junction diode.
2. Single phase half wave and full wave rectifiers with capacitive filters.
3. Characteristics of Zener diode and Zener as series voltage regulator.
4. Characteristics of photo diode, Study of light activated relay circuit.
5. Characteristics of Bipolar Junction Transistor under common emitter configuration.
6. Characteristics of BJT under common base configuration.

CYCLE-II

1. Characteristics of JFET.
2. Study the characteristics of SCR.
3. Study the Characteristics of UJT and generation of saw tooth waveforms.
4. Differential amplifiers using FET.
5. Design and testing of Feedback amplifiers (Any one type)
6. Design and testing of RC phase shift, LC oscillators.
7. Simulation of rectifier circuits using SIMULINK.

ADDITIONAL EXPERIMENTS

1. Design of regulated power supply.

INDEX

S.No	EXPERIMENT NAME	Page Number
1.	Characteristics of PN Junction diode.	2
2.	Single phase half wave and full wave rectifiers with capacitive filters	6
3.	Characteristics of Zener diode and Zener as series voltage regulator.	14
4.	Characteristics of photo diode, Study of light activated relay circuit.	18
5.	Characteristics of Bipolar Junction Transistor under common emitter configuration.	22
6.	Characteristics of BJT under common base configuration.	26
7.	Characteristics of JFET.	30
8.	Study the characteristics of SCR.	33
9.	Study the Characteristics of UJT and generation of saw tooth waveforms.	38
10.	Differential amplifiers using FET.	41
11.	Design and testing of Feedback amplifiers (Any one type)	45
12.	Design and testing of RC phase shift, LC oscillators	48
13.	Simulation of rectifier circuits using SIMULINK.	53
14.	Design of regulated power supply	62

CIRCUIT DIAGRAM

FORWARD BIAS:

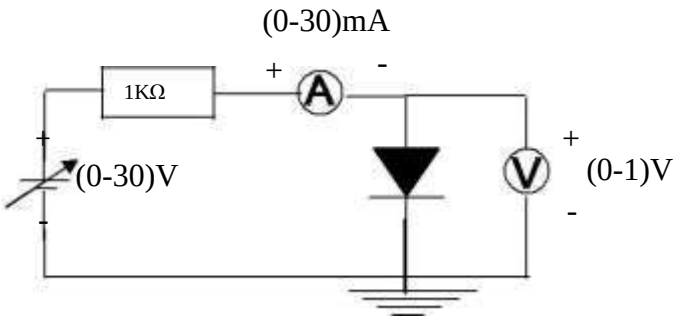

REVERSE BIAS:

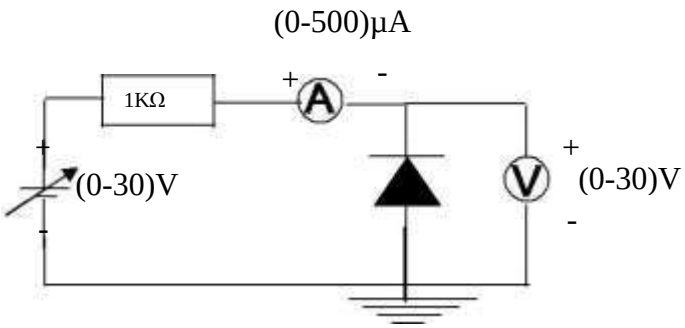

MODEL GRAPH

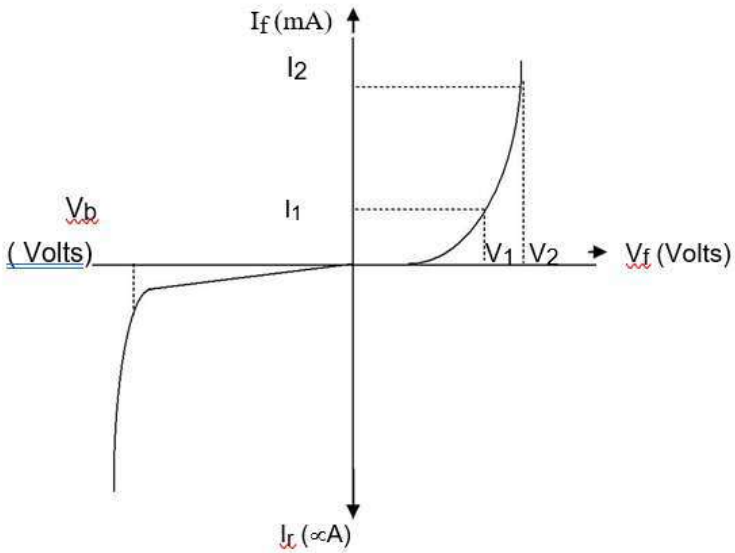

EXPT. NO: 1 CHARACTERISTICS OF PN JUNCTION DIODE

AIM:

To study the PN junction diode characteristics under Forward & Reverse bias conditions.

COMPONENTS REQUIRED:

S.NO	Name of the Component	Specification/Range	Quantity
1	R.P. S	(0-30)V	1
2	Ammeter	(0–30)mA	1
		(0-100µA	1
3	Voltmeter	(0–1)V	1
		(0-10)V	1
4	Diode	IN4001	1
5	Resistor	1kΩ	1
6	Bread Board		1
7	Wires		

THEORY:

A PN junction diode is a two terminal junction device. It conducts only in one direction (only on forward biasing).

FORWARD BIAS:

On forward biasing, initially no current flows due to barrier potential. As the applied potential exceeds the barrier potential the charge carriers gain sufficient energy to cross the potential barrier and hence enter the other region. The holes, which are majority carriers in the P-region, become minority carriers on entering the N-regions, and electrons, which are the majority carriers in the N-region, become minority carriers on entering the P-region. This injection of Minority

TABULATION

FORWARD BIAS:

S.No.	VOLTAGE (Volts)	CURRENT (mA)

REVERSE BIAS:

S..No.	VOLTAGE (Volts)	CURRENT (µA)

REVERSE BIAS:

On reverse biasing, the majority charge carriers are attracted towards the terminals due to the applied potential resulting in the widening of the depletion region. Since the charge carriers are pushed towards the terminals no current flows in the device due to majority charge carriers. There will be some current in the device due to the thermally generated minority carriers. The generation of such carriers is independent of the applied potential and hence the current is constant for all increasing reverse potential. This current is referred to as Reverse Saturation Current (I_O) and it increases with temperature. When the applied reverse voltage is increased beyond the certain limit, it results in breakdown. During breakdown, the diode current increases tremendously.

PRECAUTIONS:

1. While doing the experiment do not exceed the ratings of the diode. This may lead to damage of the diode.
2. Connect voltmeter and Ammeter in correct polarities as shown in the circuit diagram.
3. Do not switch **ON** the power supply unless you have checked the circuit connections as per the circuit diagram.

FORWARD BIAS:

1. Connect the circuit as per the diagram.
2. Vary the applied voltage V in steps of 0.1V.
3. Note down the corresponding Ammeter readings I.
4. Plot a graph between V & I

REVERSE BIAS:

1. Connect the circuit as per the diagram.
2. Vary the applied voltage V in steps of 1.0V.
3. Note down the corresponding Ammeter readings I.
4. Plot a graph between V & I.

5, Find the dynamic resistance **r = δV / δI.**

RESULT:

Thus, the Forward and Reverse bias characteristics of the PN junction diode are studied.

CIRCUIT DIAGRAM:

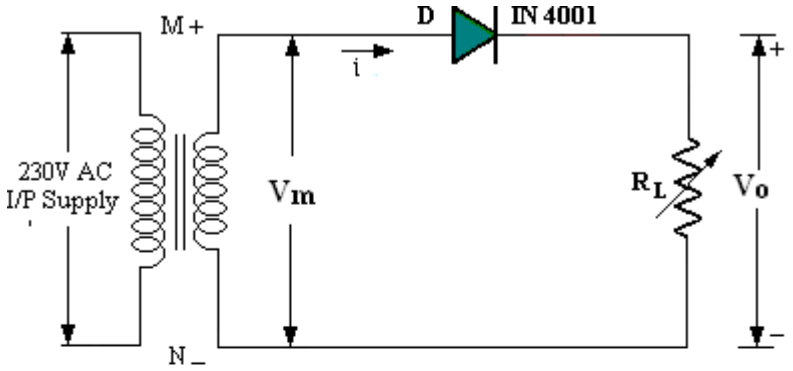

Half-wave Rectifier without filter

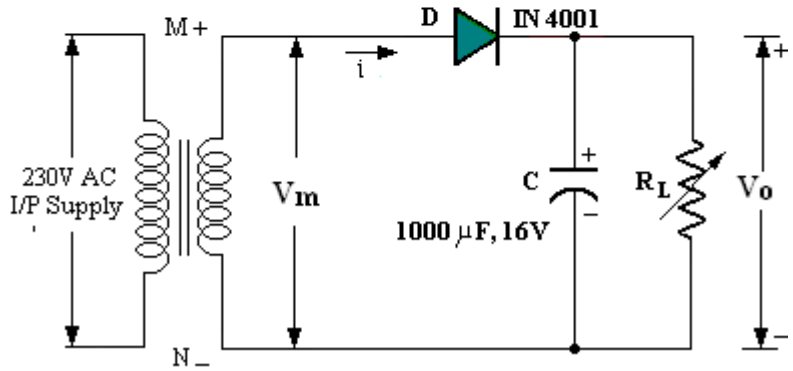

Half-wave Rectifier with capacitor filter

WAVE SHAPES:

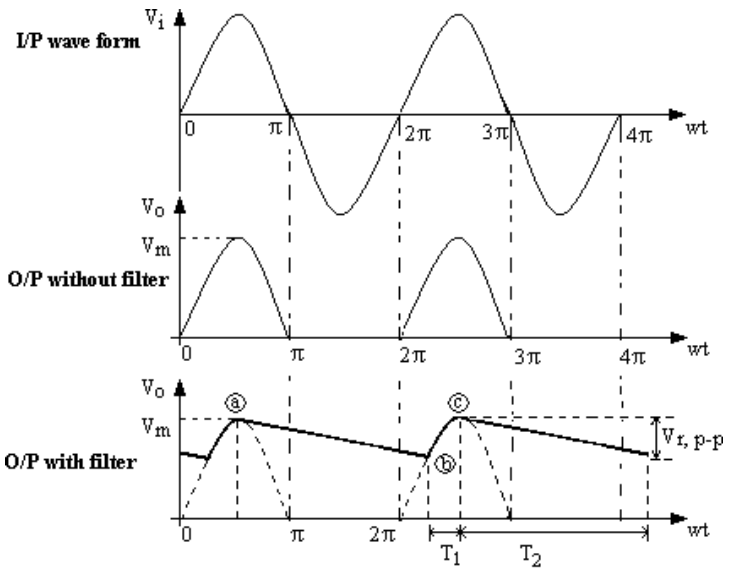

Half-wave Rectifier with capacitor filter wave form

EXP NO:2 SINGLE PHASE HALF WAVE RECTIFIER AND FULL WAVE RECTIFIER

AIM:

To construct a Half wave rectifier and full wave rectifier using diode and to draw its performance characteristics.

COMPONENTS REQUIRED: *:*

S.NO	Name of the Component	Specification/ Range	Quantity
1	Transformer	230/(6-0-6)V	1
2	R.P.S	(0-30)V	2
3	Ammeter	(0–30)mA	1
		(0–250)µA	1
4	Voltmeter	(0–30)V	1
		(0–2)V	1
5	Diode	IN4001	2
6	Resistor	1K Ω	1
7	Bread Board		1
8	Capacitor	100µf	1
9	CRO		1

TABULATION

WITHOUT FILTER:

V_m	Vrms	Vdc	Ripple factor	Efficiency

WITH FILTER:

Vrms	Vrpp	Vdc	Ripple factor	Efficiency

A device is capable of converting a sinusoidal input waveform into aunidirectional waveform with non-zero average component is called a rectifier. Apractical half wave rectifier with a resistive load is shown in the circuit diagram. In positive half cycle, Diode D is forward biased and conducts. Thus the output voltage is same as the input voltage. In the negative half cycle, Diode D is reverse biased, and therefore output voltage is zero. A smoothing filter is induced between the rectifier and load in order to attenuate the ripple component. The filter is simply a capacitor connected from the rectifier output to ground. The capacitor quickly charges at the beginning of a cycle and slowly discharges through R_L after the positive peak of the input voltage. The variation in the capacitor voltage due to charging and discharging is called ripple voltage. Generally, ripple is undesirable, thus the smaller the ripple, thebetter the filtering action.Ripple factor is a measure of effectiveness of a rectifier circuit and defined as a ratio of RMS value of ac component to the dc component in the rectifier output.

Theoretical calculations for Ripple Factor:

Without Filter:

$V_{rms} = V_m / 2$

$$V_{dc} = \frac{V_m}{\pi}$$

Ripple factor (Theoretical) $= \sqrt{(\frac{V_{rms}}{V_{dc}})^2 - 1} = 1.21$

Ripple Factor(practical) $\gamma = \frac{V_{ac}}{V_{dc}}$ where $V_{ac} = \sqrt{(V_{rms}^2 - V_{dc}^2)}$

With Filter:

Ripple Factor (Theoretical)

$r = \frac{1}{2\sqrt{3}fCR}$ Where f = 50Hz, R =

$$V_{ac} = \frac{V_{r(p-p)}}{2\sqrt{3}}$$

1K Ω, C = 1000 μF

$$V_{dc} = V_m - \frac{V_{r(p-p)}}{2}$$

Ripple Factor(practical) $\gamma = \frac{V_{ac}}{V_{dc}}$

Percentage Regulation $= \frac{V_{NL} - V_{FL}}{V_{FL}} * 100$ %

V_{NL} = DC voltage at the load without connecting the load (Minimum current).V_{FL} = DC voltage at the load with load connected.

Efficiency

CIRCUIT DIAGRAM-

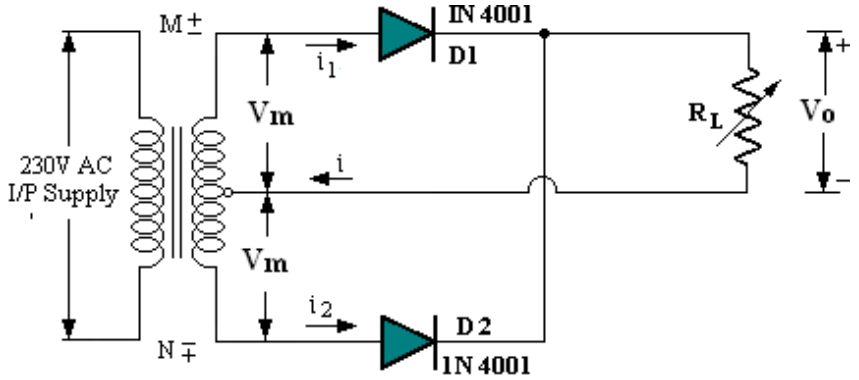

Full-wave Rectifier without filter

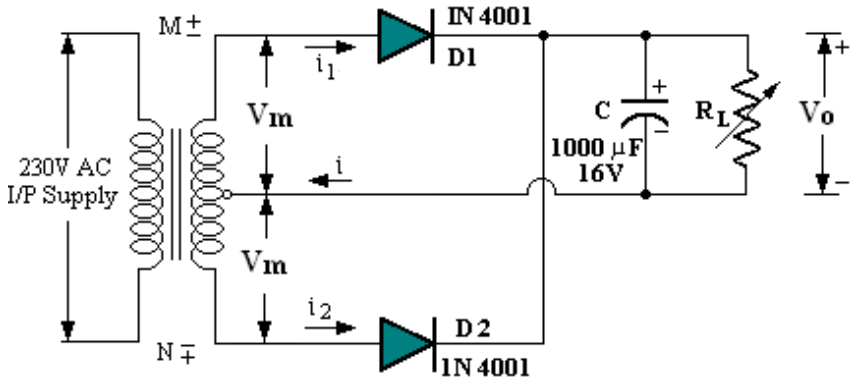

Full-wave Rectifier with capacitor filter

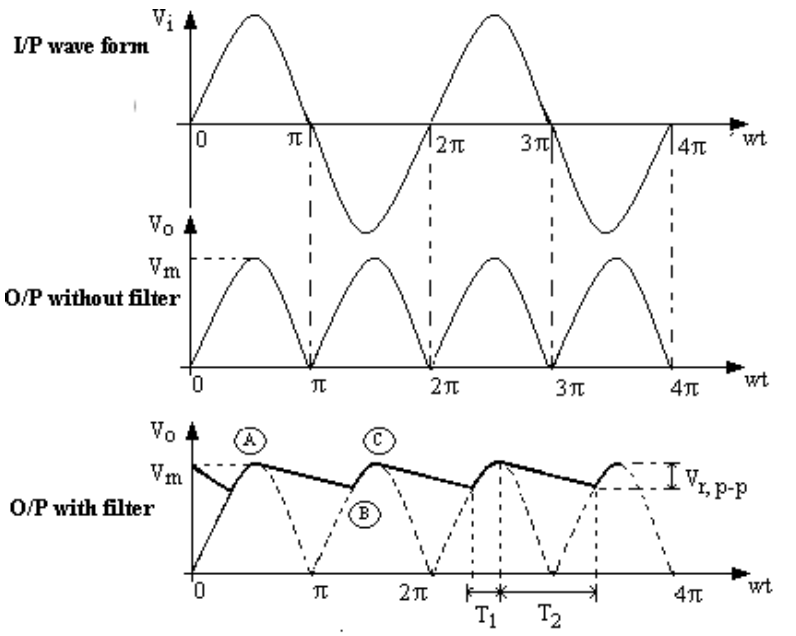

Full-wave Rectifier with capacitor filter wave form

$$\eta = \frac{P_{DC}}{P_{AC}}$$ $P_{AC} = V^2_{rms} / R_L$

$P_{DC} = V^2_{dc} / R_L$

The ripple factor can be lowered by increasing the value of the filter capacitor or increasing the load capacitance.

A device is capable of converting a sinusoidal input waveform into a unidirectional waveform with non-zero average component is called a rectifier.

A practical full wave rectifier with a resistive load is shown in the circuit diagram. It consists of two half wave rectifiers connected to a common load. One rectifies during positive half cycle of the input and the other rectifying the negative half cycle. The transformer supplies the two diodes (D1 and D2) with sinusoidal input voltages that are equal in magnitude but opposite in phase. During input positive half cycle, diode D1 is ON and diode D2 is OFF. During negative half cycle D1 is OFF and diode D2 is ON. Peak Inverse Voltage (PIV) is the maximum voltage that has to be withstand by a diode when it is reverse biased. Peak inverse voltage for Full Wave Rectifier is $2V_m$ because the entire secondary voltage appears across the non-conducting diode.

The output of the Full Wave Rectifier contains both ac and dc components. A majority of the applications, which cannot tolerate a high value ripple, necessitates further processing of the rectified output. The undesirable ac components i.e. the ripple, can be minimized using filters.

Ripple Factor:

Ripple factor is defined as the ratio of the effective value of AC components to the average DC value. It is denoted by the symbol 'γ'.

$$\gamma = \frac{V_{ac}}{V_{dc}}, (\gamma = 0.48)$$

Efficiency:

The ratio of output DC power to input AC power is defined as efficiency.

$$\eta = \frac{(V_{dc})^2}{(V_{ac})^2}$$

= 81% (if $R >> R_f$, then R_f can be neglected).

The maximum efficiency of a Full Wave Rectifier is 81.2%.

Percentage of Regulation:

It is a measure of the variation of DC output voltage as a function of DC output current (i.e., variation in load).

Percentage of regulation = $\left(\frac{V_{NL} - V_{FL}}{V_{FL}}\right) * 100$ %

V_{NL} = Voltage across load resistance, when minimum current flows through it. V_{FL} = Voltage across load resistance, when maximum current flows through.

For an ideal Full-wave rectifier, the percentage regulation is 0 percent. The percentageof regulation is very small for a practical full wave rectifier.

Peak- Inverse - Voltage (PIV):

It is the maximum voltage that the diode has to withstand when it is reversebiased. PIV = $2V_m$

Transformer Utilization Factor

Transformer utilization factor (TUF), which is defined as the ratio of power delivered to the load and ac rating of the transformer secondary, So TUF = dc powerdelivered to the load/ac rating of transformer secondary

Transformer Utilization Factor, TUF can be used to determine the rating of a transformer secondary. It is determined by considering the primary and the secondary winding separately and it gives a value of 0.693.

Without filter:

$$V_{rms} = \frac{V_m}{\sqrt{2}}$$

$$V_{ac} = \sqrt{(V_{rms}^2 - V_{dc}^2)}$$

$$V_{dc} = \frac{2V_m}{\pi}$$

Ripple factor (Theoretical) =

$$\sqrt{(\frac{V_{rms}}{V_{dc}})^2 - 1} = 0.48$$

Ripple Factor (Practical) $\gamma = \frac{V_{ac}}{V_{dc}}$

With filter:

Ripple factor (Theoretical)

$$V_{ac} = \frac{V_{r(p-p)}}{2\sqrt{3}}$$

$$\gamma = \frac{1}{4\sqrt{3}fCR}$$ Where f = 50Hz, R =1K Ω, C = 1000 μF.

$$V_{dc} = V_m - \frac{V_{r(p-p)}}{2}$$

Ripple Factor $\gamma = \frac{V_{ac}}{V_{dc}}$

Percentage Regulation = $\left(\frac{V_{NL} - V_{FL}}{V_{FL}}\right) * 100$

V_{NL} = DC voltage at the load without connecting the load (Minimum current). V_{FL} = DC voltage at the load with load connected.

Efficiency $\eta = \frac{P_{DC}}{P_{AC}}$

P_{AC} =

V^2_{rms} / R_L

P_{DC} =

V^2_{dc} / R_L

PROCEDURE:

WITHOUT FILTER:

1. Give the connections as per the circuit diagram.
2. Give 230v, 50HZ I/P to the step down TFR where secondary connected to the Rectifier I/P.
3. Take the rectifier output across the Load.
4. Plot its performance graph.

WITH FILTER:

1. Give the connections as per the circuit diagram.
2. Give 230v, 50HZ I/P to the step down TFR where secondary connected to the Rectifier I/P.
3. Connect the Capacitor across the Load.
4. Take the rectifier output across the Load.
5. Plot its performance graph.

POST-LAB EXERCISE:

1. Name the basic types of rectifiers?
2. What is efficiency of a rectifier?
3. What is form factor?
4. What is peak factor?
5. What is called ripple Voltage?
6. Define Ripple factor in rectifiers?

RESULT:

Thus the Half wave rectifier and full wave rectifier using diode was constructed and to its performance characteristics are studied.

CIRCUIT DIAGRAM

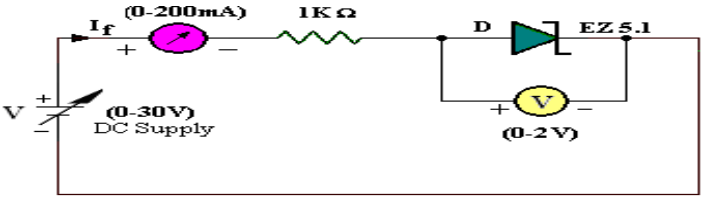

Forward Bias Characteristics

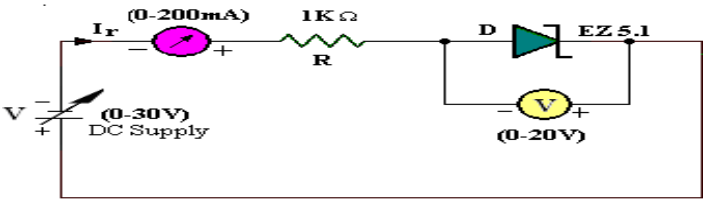

Reverse Bias Characteristics

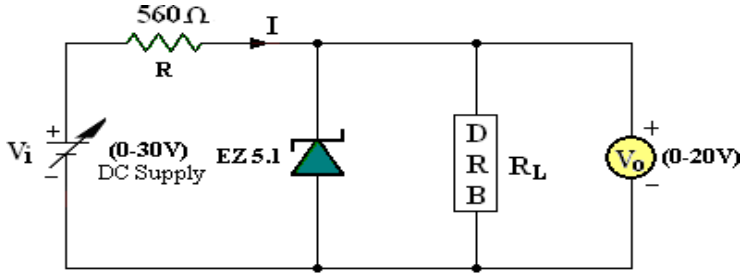

Zener Diode Voltage Regulation

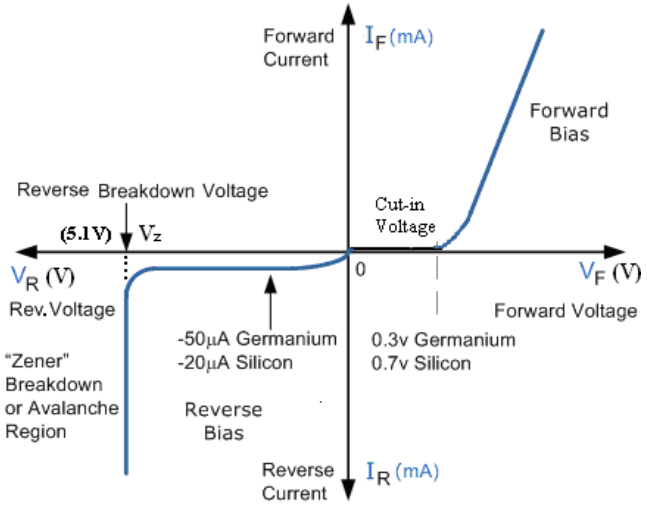

V-I Characteristics of Zener Diode

EXPT. NO: 3 CHARACTERISTICS OF ZENER DIODE AND ZENER AS SERIES VOLTAGE REGULATOR.

AIM:

To study the Zener diode characteristics and Zener as series voltage regulator.

COMPONENTS REQUIRED:

S.NO	Name of the Component	Specification/ Range	Quantity
1	R.P.S	(0-30)V	2
2	Ammeter	(0–30)mA	1
		(0–250)µA	1
3	Voltmeter	(0–30)V	1
		(0–2)V	1
4	Zener diode	FZ6.1	1
5	Resistor	1KΩ	1
6	Bread Board		1
7	Wires		

THEORY:

FORWARD BIAS:

On forward biasing, initially no current flows due to barrier potential. As the applied potential increases, it exceeds the barrier potential at one value and the charge carriers gain sufficient energy to cross the potential barrier and enter the other region. the holes ,which are majority carriers in p-region, become minority carriers on entering the N-regions and electrons, which are the majority carriers in the N-regions become minority carriers on entering the P-region. This injection of minority carriers results current, opposite to the direction of electron movement.

REVERSE BIAS:

When the reverse bias is applied due to majority carriers small amount of current (i.e) reverse saturation current flows across the junction. As the reverse bias is increased to breakdown voltage,

sudden rise in current takes place due to zener effect.

TABULATION

FORWARD BIAS:

S.No.	VOLTAGE (In Volts)	CURRENT (In mA)

REVERSE BIAS:

S..No.	VOLTAGE (In Volts)	CURRENT (In □A)

ZENER EFFECT:

Normally, PN junction of Zener Diode is heavily doped. Due to heavy doping the depletion layer will be narrow. When the reverse bias is increased the potential across the depletion layer is more. This exerts a force on the electrons in the outermost shell. Because of this force the electrons are pulled away from the parent nuclei and become free electrons. This ionization, which occurs due to electrostatic force of attraction, is known as Zener effect. It results in large number of free carriers, which in turn increases the reverse saturation current

PROCEDURE:

FORWARD BIAS:

1. Connect the circuit as per the circuit diagram.
2. Vary the power supply in such a way that the readings are taken in steps of 0.1V in the voltmeter till the needle of power supply shows 30V.
3. Note down the corresponding ammeter readings.
4. Plot the graph :V (vs) I.

REVERSE BIAS:

1. Connect the circuit as per the diagram.
2. Vary the power supply in such a way that the readings are taken in steps of 0.1V in the voltmeter till the needle of power supply shows 30V.
3. Note down the corresponding Ammeter readings I.
4. Plot a graph between V & I.

POST-LAB EXERCISE:

1. Can we use Zener diode for rectification purpose?

2. What happens when the Zener diodes are connected in series?

3. What type of biasing must be used when a Zener diode is used as a regulator?

4. Current in a 1W – 10V Zener diode must be limited to a maximum of what value?

5. How will you differentiate the diodes whether it is Zener or avalanche when youare given two diodes of rating 6.2 v and 24V?

RESULT:

Thus the Forward and Reverse bias characteristics of the zener diode and Zerner as voltage regulator was studied.

CIRCUIT DIAGRAM:

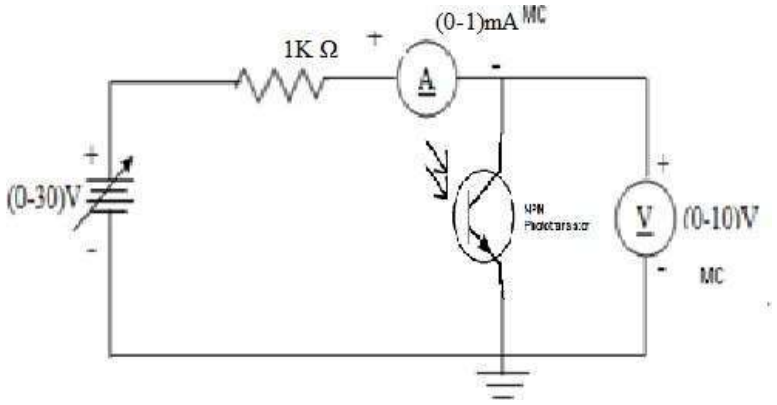

MODEL GRAPH:

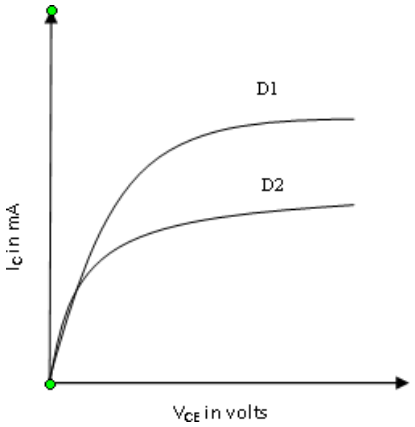

EX NO:4 CHARACTERISTICS OF PHOTO-DIODE , STUDY OF LIGHT ACTIVATED RELAY CIRCUIT.

AIM:

To study the characteristics of a photo-diode.

COMPONENTS REQUIRED::

S.NO	Name of the Component	Specification/ Range	Quantity
1.	Regulated power supply	(0 - 30V)	1
2.	Voltmeter	(0-10V)MC	1
3.	Ammeter	(0-1000µA)MC	1
4.	Photodiode	-	1
5.	Resistors	100Ω/1KΩ/10KΩ	1
6.	Bread board, connecting wires.	-	1,few

THEORY:

PHOTODIODE:

A photo diode is a two terminal pn junction device, which operates on reverse bias. On reverse biasing a pn junction diode, there results a constant current due to minority charge carriers known as reverse saturation current. Increasing the thermally generated minority carriers by applying external energy, i.e., either heat or light energy at the junction can increase this current. When we apply light energy as an external source, it results in a photo diode that is usually placed in a glass package so that light can reach the junction. Initially when no light is incident, the current is only the reverse saturation current that flows through the reverse biased diode. This current is termed as the dark current of the photo diode. Now when light is incident on the photo diode then the thermally generated carriers increase resulting in an increased reverse current which is proportional to the intensity of incident light. A photo diode can turn on and off at a faster rate and so it is used as a fast acting switch.

TABULATION:

VI CHARACTERISTICS **D=**			I-D CHARACTERISTICS $\mathbf{V_{AK}}$ **=**		
S.No.	Voltage V_{AK} (V)	Current (μA)	S.No.	Distance(cm)	Current (μA)

PROCEDURE:

1. Position the pointer at zero on the scale, when the bulb is at maximum distance away fromsensors.
2. Switch ON the power supply to the instrument.
3. Measure the DC voltage output of phototransistor using a millimeter or a CRO across twoterminals.
4. Gradually move the bulb towards the sensor in steps of 5mm and note the correspondingvoltages.
5. Tabulate the readings and plot the graph of distance versus sensor output voltage and voltageversus current.

POST-LAB EXERCISE:

1. What happens when distance is increased in case of LDR, Photodiode and Phototransistor?

2. Define dark current in photodiode?

3. Can we operate photodiode in forward bias condition? Justify the answer?

4. Why we are making light to fall on collector base junction in case of phototransistor?

RESULT:

Thus the characteristics of photo diode is studied.

CIRCUIT DIAGRAM

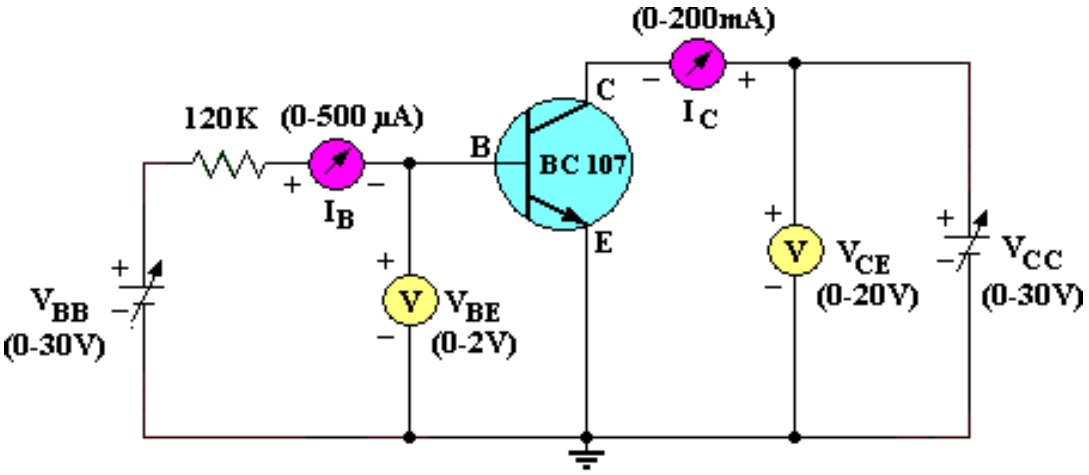

Common Emitter Transistor Characteristics

MODEL GRAPH

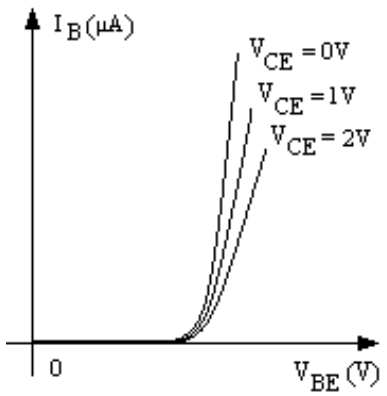

CE I/P Characteristics

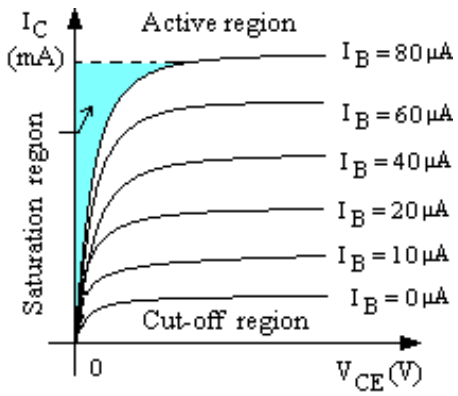

CE O/P Characteristics

EX NO :5 CHARACTERISTICS OF BIPOLAR JUNCTION TRANSISTOR UNDER COMMON EMITTER CONFIGURATION

AIM: To study the Characteristics of Bipolar Junction Transistor under common emitter configuration.

COMPONENTS REQUIRED::

S.NO	Name of the Component	Specification/Range	Quantity
1	R.P.S	(0-30)V	2
2	Ammeter	(0–10)mA	1
3	Voltmeter	(0–30)V, (0–2)V	1
4	Transistor	BC 107	1
5	Resistor	10kΩ, 1KΩ	1
6	Bread Board		1
7	Wires		

THEORY:

A BJT is a three terminal two – junction semiconductor device in which the conduction is due to both the charge carrier. Hence it is a bipolar device and it amplifier the sine waveform as they are transferred from input to output. BJT is classified into two types – NPN or PNP. A NPN transistor consists of two N types in between which a layer of P is sandwiched. The transistor consists of three terminal emitter, collector and base. The emitter layer is the source of the charge carriers and it is heartily doped with a moderate cross sectional area. The collector collects the charge carries and hence moderate doping and large cross sectional area. The base region acts a path for the movement of the charge carriers. In order to reduce the recombination of holes and electrons the base region is lightly doped and is of hollow cross sectional area. Normally the transistor operates with the EB junction forward biased.

TABULATION

INPUT CHARACTERISTICS

V_{CE}=1V		V_{CE}=2V	
V_{BE}(V)	I_B(μA)	V_{BE}(V)	I_B(μA)

OUTPUT CHARACTERISTICS:

I_B=20μA		I_B=40μA	
V_{CE}(V)	I_C(mA)	V_{CE}(V)	I_C(mA)

PROCEDURE:

INPUT CHARECTERISTICS:

1. Connect the circuit as per the circuit diagram.
2. Set V_{CE} ,vary V_{BE} in regular interval of steps and note down the corresponding I_B reading.
3. Repeat the above procedure for different values of V_{CE}.
4. Plot the graph: V_{BE} Vs I_B for a constant V_{CE}.

OUTPUT CHARACTERISTICS:

1. Connect the circuit as per the circuit diagram.
2. Set $I_{B,}$ Vary V_{CE} in regular interval of steps and note down the corresponding I_C reading. Repeat the above procedure for different values of I_B.
3. Plot the graph: V_{CE} Vs I_C for a constant I_B.

POST-LAB EXERCISE:

1. NPN transitors are more preferable for amplification purpose than PNP transistors. Why?
2. Explain the switching action of a transistor?
3. At what region of the output characteristics, a transistor can act as an amplifier?
4. What happens when we change the biasing condition of the transistors.

Why the output is phase shifted by 180 ◦ only in CE configuration

RESULT:

The transistor characteristics of a Common Emitter (CE) configuration were plotted.

CIRCUIT DIAGRAM

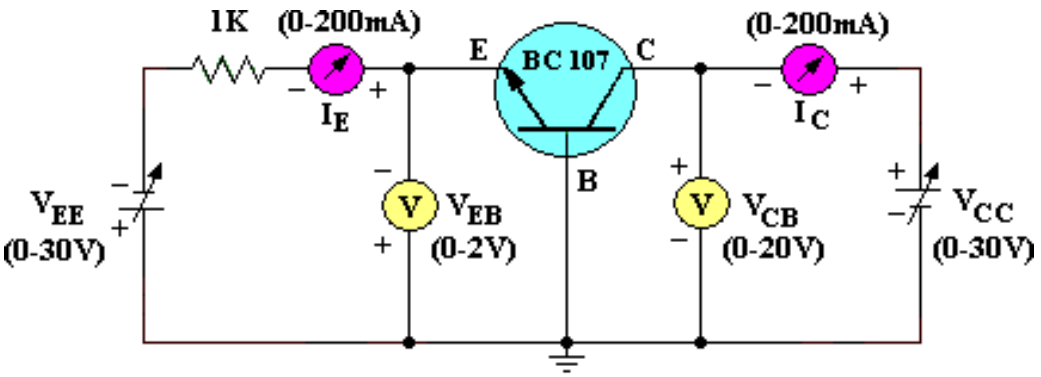

Common Base Transistor Characteristics

MODEL GRAPHS;

1. Plot the Input characteristics by taking I_E on y–axis and V_{EB} on x–axis.
2. Plot the Output characteristics by taking I_C on y–axis and V_{CB} on x–axis.

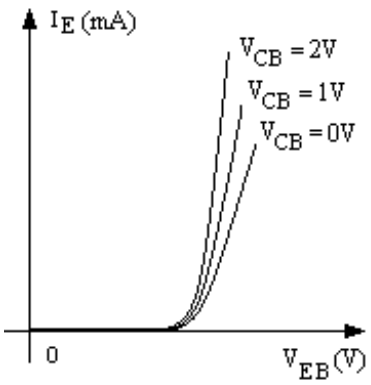

CB I/P Characteristics

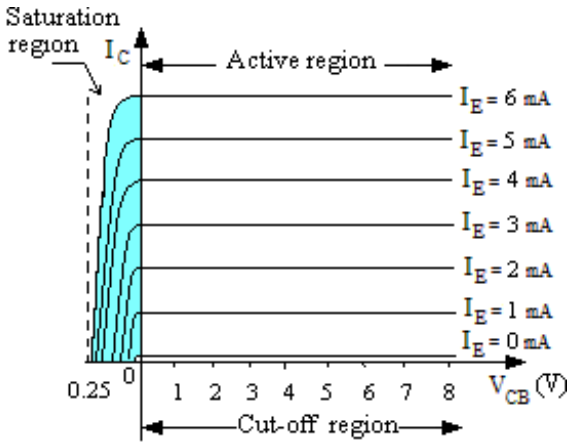

CB O/P Characteristics

EX NO :6 CHARACTERISTICS OF BJT UNDER COMMON BASE CONFIGURATION.

AIM:

To plot the transistor characteristics of CB configuration.

COMPONENTS REQUIRED::

S.NO	Name of the Component	Specification/Range	Quantity
1	R.P.S	(0-30)V	2
2	Ammeter	(0–10)mA	1
3	Voltmeter	(0–30)V, (0–2)V	1
4	Transistor	BC 107	1
5	Resistor	10kΩ, 1KΩ	1
6	Bread Board		1
7	Wires		few

THEORY:

In this configuration the base is made common to both the input and out. The emitter is given the input and the output is taken across the collector. The current gain of this configuration is less than unity. The voltage gain of CB configuration is high. Due to the high voltage gain, the power gain is also high. In CB configuration, Base is common to both input and output. In CB configuration the input characteristics relate I_E and V_{EB} for a constant V_{CB}. Initially let $V_{CB} = 0$ then the input junction is equivalent to a forward biased diode and the characteristics resembles that of a diode. Where $V_{CB} = +V_I$ (volts) due to early effect I_E increases and so the characteristics shifts to the left. The output characteristics relate I_C and V_{CB} for a constant I_E. Initially I_C increases and then it levels for a value $I_C = \alpha I_E$. When I_E is increased I_C also increases proportionality

PROCEDURE:

INPUT CHARACTERISTICS:

It is the curve between emitter current I_E and emitter-base voltage V_{BE} at constant collector-base voltage $V_{CB.}$

1. Connect the circuit as per the circuit diagram.
2. Set V_{CE}=5V, vary V_{BE} in steps of 0.1V and note down the corresponding I_B.

   Repeat the above procedure for 10V, 15V.
3. Plot the graph V_{BE} Vs I_B for a constant V_{CE}.

TABULATION

INPUT CHARACTERISTICS

V_{CB}= V		V_{CB} = V	
V_{BE}(V)	I_E(mA)	V_{BE}(V)	I_E(mA)

OUTPUT CHARACTERISTICS:

I_E= mA		I_E= mA	
V_{CB}(V)	I_C(mA)	V_{CB}(V)	I_C(mA)

OUTPUT CHARACTERISTICS:

It is the curve between collector current I_C and collector-base voltage V_{CB} at constant emitter current I_E.

1. Connect the circuit as per the circuit diagram.
2. Set I_B=20□A, vary V_{CE} in steps of 1V and note down the corresponding I_C.

   Repeat the above procedure for 40□A, 80□A, etc.
3. Plot the graph V_{CE} Vs I_C for a constant I_B.

POST-LAB EXERCISE:

1. What are the applications of CB configuration?
2. Compare the voltage gain and input and output impedances of CE and CB configurations.
3. BJT is a current controlled device. Justify.

RESULT:

The transistor characteristics of a Common Base (CB) configuration were plotted and uses studied.

CIRCUIT DIAGRAM

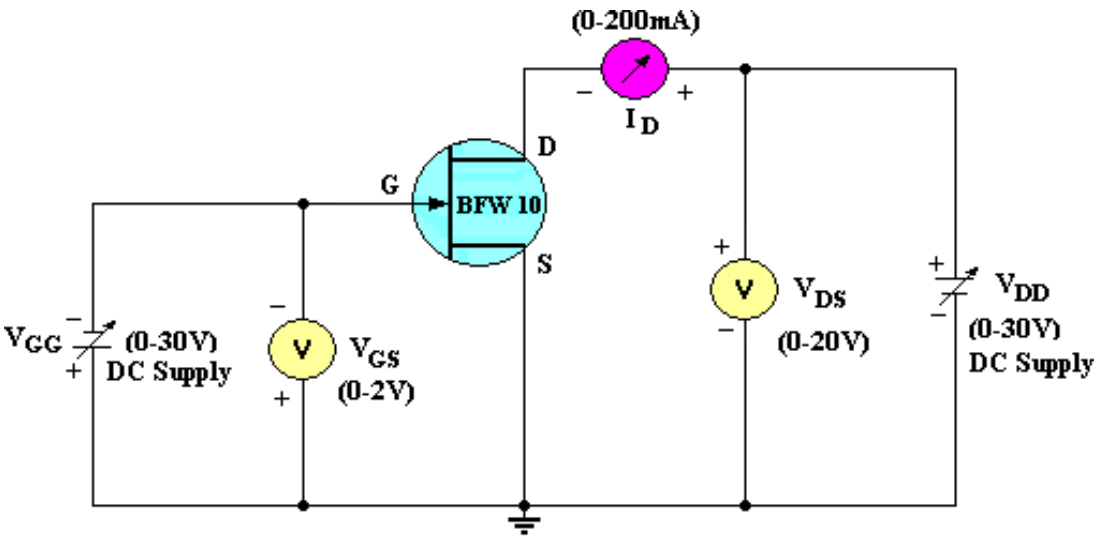

JFET Drain Characteristics

MODEL GRAPH:

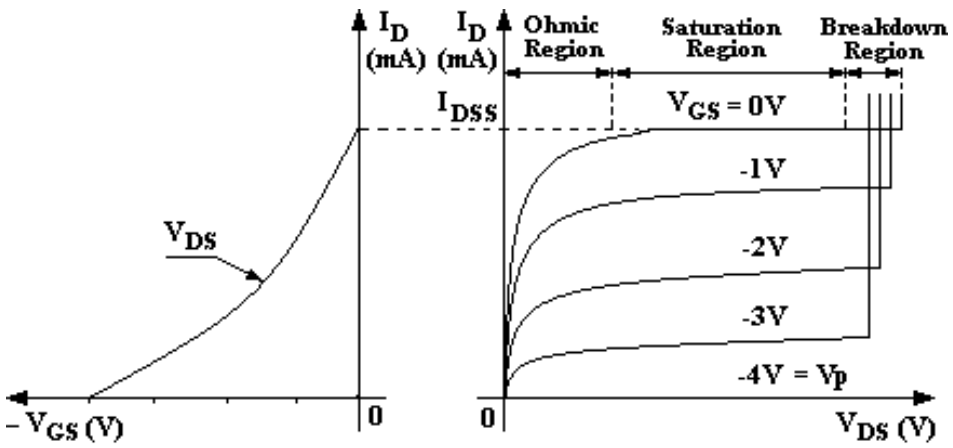

FET Transfer Characteristics FET Drain Characteristics

EX NO: 7 **CHARACTERISTICS OF JFET**

AIM:

To conduct an experiment on a given JFET and obtain

1) Drain characteristics
2) Transfer Characteristics.
3) To find r_d, g_m, and μ from the characteristics.

COMPONENTS REQUIRED::

S.NO	Name of the Component	Specification/Range	Quantity
1.	Dual Regulated D.C Power supply	(0–30 Volts)	1
2.	JFET	BFW 10 or 11	1
3.	D.C Ammeter	(0 – 20mA)	1
4.	D.C Voltmeters	(0 – 2V), (0 – 20V)	Each 1
5.	Bread Board and connecting wires	--	1 Set

THEORY:

FET is a voltage operated device. It has got 3 terminals. They are Source, Drain & Gate. When the gate is biased negative with respect to the source, the pn junctions are reverse biased & depletion regions are formed. The channel is more lightly doped than the p type gate, so the depletion regions penetrate deeply in to the channel. The result is that the channel is narrowed, its resistance is increased, & I_D is reduced. When the negative bias voltage is further increased, the depletion regions meet at the center & I_D is cutoff completely.

PROCEDURE:

DRAIN CHARACTERISTICS:

1. Connect the circuit as per the circuit diagram.
2. Set the gate voltage V_{GS} = 0V.
3. Vary V_{DS} in steps of 1 V & note down the corresponding I_D.
4. Repeat the same procedure for V_{GS} = -1V.
5. Plot the graph V_{DS} Vs I_D for constant V_{GS}.

OBSERVATIONS:

1. d.c (static) drain resistance, $r_D = V_{DS}/I_D$.

2. a.c (dynamic) drain resistance, r_d = $\mathbf{V_{DS}/ I_D}$.
3. Open source impedance, $Y_{OS} = 1/ r_d$.

TABULATION

DRAIN CHARACTERISTICS

V_{GS} = 0V		V_{GS} = -1V	
V_{DS} (V)	I_D(mA)	V_{DS} (V)	I_D(mA)

TRANSFER CHARACTERISTICS

V_{DS} =5volts		V_{DS} = 10volts	
V_{GS} (V)	I_D(mA)	V_{GS} (V)	I_D(mA)

TRANSFER CHARACTERISTICS:

1. Connect the circuit as per the circuit diagram.
2. Set the drain voltage V_{DS} = 5 V.
3. Vary the gate voltage V_{GS} in steps of 1V & note down the corresponding $I_{D.}$
4. Repeat the same procedure for V_{DS} = 10V.
5. Plot the graph V_{GS} Vs I_D for constant $V_{DS.}$

FET PARAMETER CALCULATION:

Drain Resistancd rd =

Transconductance g_m =

Amplification factor μ=rd . gm

POST-LAB EXERCISE:

1. What is Transconductance?

2. Why current gain is important parameter in bjt whereas conductance is important parameter in FET?

3. What is pinch off voltage?

4. How can avalanche breakdown be avoided in FET?

5. Why does FET produce less electrical noise than BJT.

RESULT:

Thus the Drain & Transfer characteristics of given FET is Plotted.

Rd =

gm =

I_{DSS} =

Pinch off voltage V_P =

CIRCUIT DIAGRAM

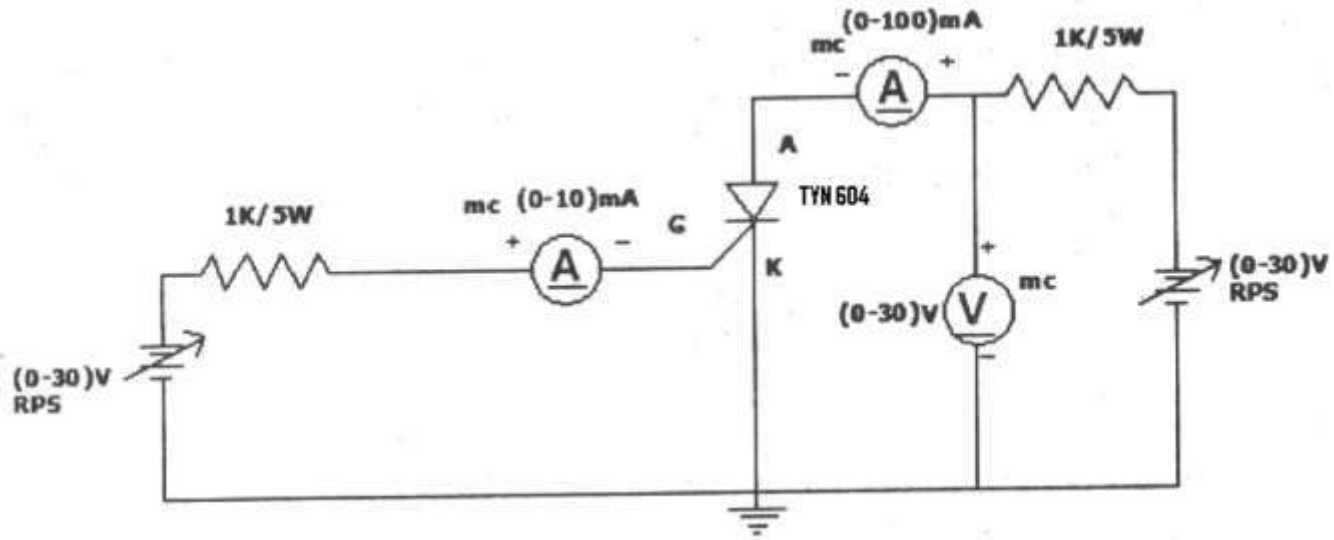

EX NO :8 STUDY THE CHARACTERISTICS OF SCR

AIM:

To draw the V – I characteristics of the given SCR & to determine the gate current for different anode voltage.

COMPONENTS REQUIRED::

S.NO	Name of the Component	Specification/Range	Quantity
1	RPS	(0-30) V	2
2	Ammeter	0-100mA (MC), 0-10mA (MC)	1
3	Voltmeter	0-30v (MC)	1
4	SCR	TYN 604	1
5	Bread board	-	1
6	Resistors	1K / 5W	2
7	Connecting Wires	-	1 set

THEORY:

A silicon controlled rectifier is a semiconductor device that acts as a true electronic switch. It can change AC into DC as like as an ordinary rectifier and at the same time it can control the amount of power fed to the load.

FORWARD CHARACTERISTICS:

When anode is positive w.r.t cathode, the curve between V-I is called forward characteristic. If the supply voltage is increased from zero, a point is reached when SCR starts conducting. Under this condition, the voltage across SCR suddenly drops and most of the voltage appears across the load resistance R_L. If proper gate current is made to flow, SCR can close at much smaller supply voltage.

REVERSE CHARACTERISTICS

When the anode is made negative w.r.t to cathode, the curve between V & I is called reverse characteristics. If the reverse voltage is increased, avalanche breakdown occurs and the SCR starts conducting heavily in reverse direction. It is similar to the ordinary PN junction diode

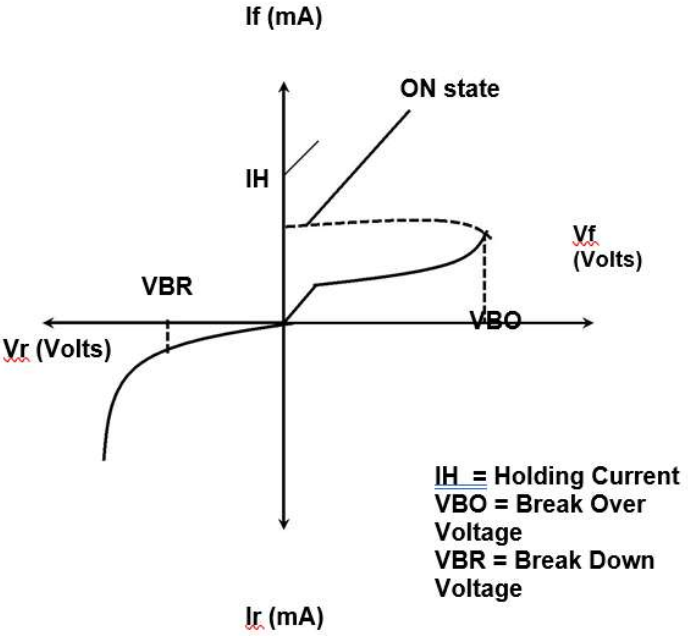

TABULATION:

Sl. No	I_{G1} =		I_{G2} =	
	V_{AK} (V)	I_A (mA)	V_{AK} (V)	I_A (mA)

PROCEDURE:

1. Connect the circuit as per the circuit diagram.
2. Set gate current I_G equal to firing current vary anode to cathode voltage, V_{AK}, in steps of 0.5 V & note down the corresponding anode current I_A.
3. V_{BO} is the point where voltage suddenly drops & there is sudden increase in anode current I_A.
4. Note down the current at that point called latching current.
5. Increase the V_{AK} in steps of 1 V till its maximum.
6. Open the gate terminal & decreases the V_{AK}.

POST-LAB EXERCISE:

1. What is SCR?
2. What is latching current ?
3. What is holding current?
4. When the SCR is ON?
5. What is avalanche break down?
6. What are the classifications of thyristors?
7. Which is called uni directional devices? Why this name?

RESULT:

Thus the characteristics of SCR is Plotted and the gate current for different anode voltage were determined.

BOTTOM VIEW OF 2N2646:

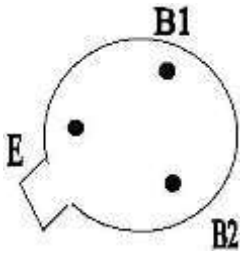

CIRCUIT DIAGRAM:

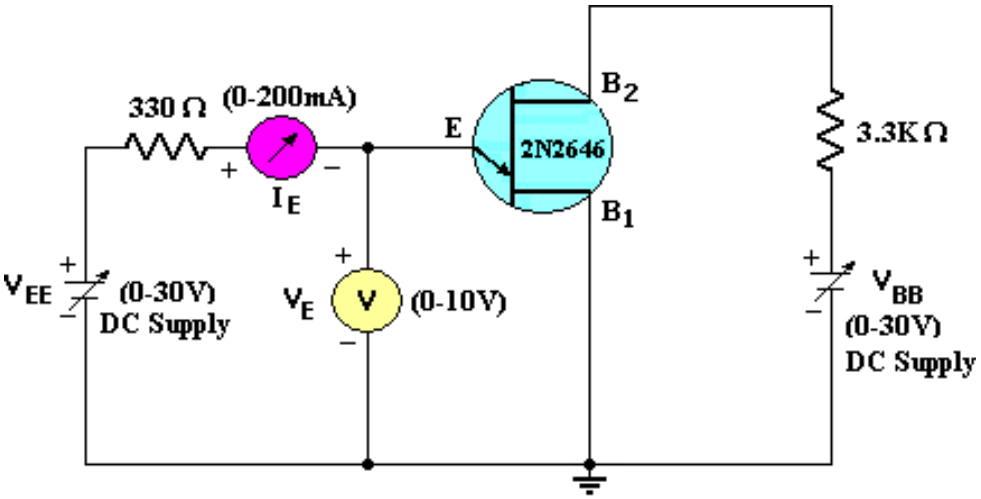

UJT Characteristics

SPECIFICATION FOR 2N2646:

* Inter base resistance R_{BB} = 4.7 to 9.1 KΩ

* Minimum Valley current = 4 mA

EX NO :9 STUDY THE CHARACTERISTICS OF UJT AND GENERATION OF SAW TOOTH WAVEFORMS.

AIM: To obtain the V-I characteristics of UJT and generate sawtooth waveforms

COMPONENTS REQUIRED::

S.NO	Name of the Component	Specification/ Range	Quantity
1	Power supply	(0 – 30V)	1
2	Transistor	UJT 2N2646	1
3	Resistors	3.3KΩ, 330Ω	Each 1
4	Ammeter	(0 -100mA)	1
5	Voltmeter	(0 – 10V)	1
6	Bread Board and connecting wires	-	1 Set

THEORY:

UJT(Double base diode) consists of a bar of lightly doped n-type silicon with a small piece of heavily doped P type material joined to one side. It has got three terminals. They are Emitter(E), Base1(B1),Base2(B2).Since the silicon bar is lightly doped, it has a high resistance & can be represented as two resistors, r_{B1} & r_{B2}. When $V_{B1B2} = 0$, a small increase in V_E forward biases the emitter junction. The resultant plot of V_E & I_E is simply the characteristics of forward biased diode with resistance. Increasing V_{EB1} reduces the emitter junction reverse bias. When $V_{EB1} = Vr_{B1}$ there is no forward or reverse bias. & $I_E = 0$. Increasing V_{EB1} beyond this point begins to forward bias the emitter junction. At the peak point, a small forward emitter current is flowing. This current is termed as peak current(I_P). Until this point UJT is said to be operating in cutoff region.When emitter current increases beyond peak current the device enters the negative resistance region. In which the resistance r_{B1} falls rapidly & V_E falls to the valley voltage.Vv. At this point I_E = Iv. A further increase of I_E causes the device to enter the saturation region.

TABULATION:

V_{B1B2} = 0V		V_{B1B2} = 10V	
V_{EB1} (V)	I_E (mA)	V_{EB1} (V)	I_E (mA)

PROCEDURE:

1. Connect the circuit as per the circuit diagram.
2. Set V_{B1B2} = 0V, vary V_{EB1} , & note down the readings of I_E & V_{EB1}
3. Set V_{B1B2} = 10V , vary V_{EB1} , & note down the readings of I_E & V_{EB1}
4. Plot the graph : I_E Versus V_{EB1} for constant V_{B1B2}.
5. Find the intrinsic standoff ratio.

FOR SAWTOOTH GENERATION:

6. Observe the output waveform on the CRO at B1, B2 and VO and Plot the graphs.
7. Vary the time constant (RC) by varying capacitor (C) or potentiometer (R) and observe the variations in the output pulses on the CRO at B1, B2 and VO.

FORMULA FOR INTRINSIC STANDOFF RATIO:

$\eta = V_P - V_D / V_{B1B2}$., where V_D = 0.7V.

POST-LAB EXERCISE

1. What are the applications of UJT?
2. Why UJT is called as a Relaxation Oscillator?
3. Which type of switch is used in UJT?
4. What is Intrinsic standoff ratio?
5. Why UJT is called a negative resistance device?

RESULT:

Thus the characteristics of given UJT was plotted & sawtooth waveforms are generated.

CIRCUIT DIAGRAM

DIFFERENTIAL MODE:

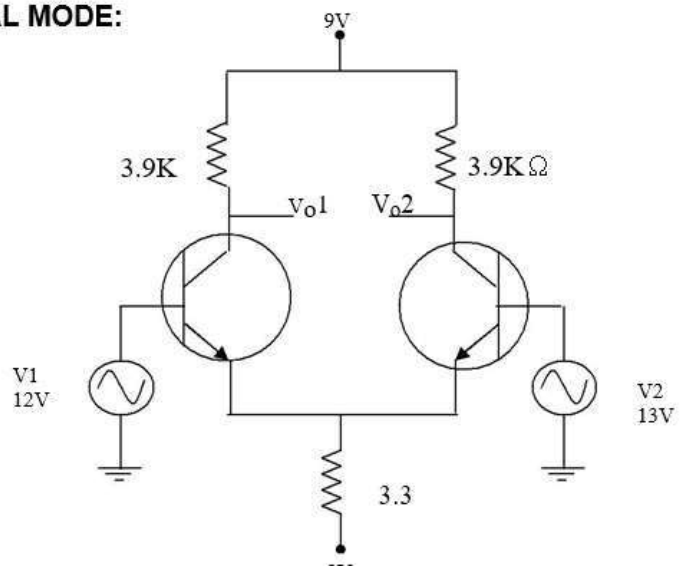

COMMON MODE:

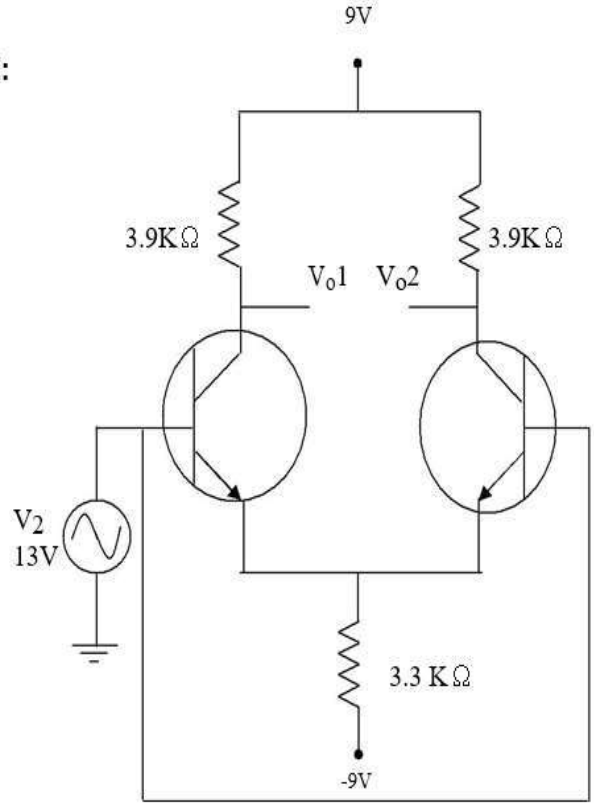

EX NO :10 DIFFERENTIAL AMPLIFIERS USING FET

AIM:

To construct a Differential amplifier in Common mode & Differential mode configuration and to find common mode rejection ratio.

COMPONENTS REQUIRED::

S.NO	Name of the Component	Specification/ Range	Quantity
1	Transistor	BC107	1
2	Capacitor	470µ F	1
3	Resistor	3.9K_.3.3K_	1
4	Bread board		1
5	RPS	(0-30V)	1
6	CRO		1
7	Signal Generator		1
8	DCB		2
9	DRB		2

THEORY:

The Differential amplifier circuit is an extremely popular connection used in IC units. The circuit has separate inputs , two separate outputs and emitters are connected together. If the same input is applied to both inputs, the operation is called common mode. In double ended operation two input signals are applied , the difference of the inputs resulting in outputs from both collectors due to the difference of the signals applied to both the inputs. The main feature of the differential amplifier is the very large gain when opposite signals are applied to inputs as compared to small signal resulting from common input. The ratio of this difference gain to the common gain is called common mode rejection ratio.

TABULATION:

DIFFERENTIAL MODE:

S.No	V_O(volts)	V_d(volts)	V_d(volts)	A_C	A_d	CMRR

COMMON MODE:

S.No	V_O(volts)	V_d(volts)	V_d(volts)	A_C	A_d	CMRR

CALCULATION:

Common mode rejection ratio(CMRR) = A_d / A_c

A_d = Differential mode gain

A_c = Common mode gain

Where $A_d = V_o / V_d$

V_o = Output voltage measured across CRO

$V_d = V_1 – V_2$, V_1 , V_2 – input voltage applied.

$A_c = V_o / Vc$

$V_c = (V_1 + V_2)/2$

DIFFERENTIAL MODE:

V_1 =

V_2 =

Output voltage =

$V_d = V_1 - V_2$ =

$A_d = V_o / V_d$ =

COMMON MODE:

Input voltage =

Output voltage =

$V_1 = V_2$ =

$V_c = (V_1 + V_2)/2$ =

PROCEDURE:

DIFFERENTIAL MODE:

1. Connect the circuit as per the circuit diagram.
2. Set V_1 = 50mv and V_2 =55mv using the signal generator.
3. Find the corresponding output voltages across V_{01} & V_{02} using CRO
4. Calculate common mode rejection ratio using the given formula.

COMMON MODE:

1. Connect the circuit as per the circuit diagram.
2. Set V_1 = 50mv using the signal generator.
3. Find the output voltage across V_o using multimeter.
4. Calculte common mode rejection ratio using the given formula.

POST-LAB EXERCISE

1. Define Common-mode Gain.
2. What is Common-mode Voltage?
3. What do you mean by a Common – Mode Rejection Ratio?
4. What is a Differential Amplifier?
5. What is the use of different amplifier stages in an op-amp?

RESULT: Thus the differential amplifier was constructed in common mode and Differential mode configuration. Further common mode rejection ratio was found.

CIRCUIT DIAGRAM: VOLTAGE SERIES FEEDBACK AMPLIFIER

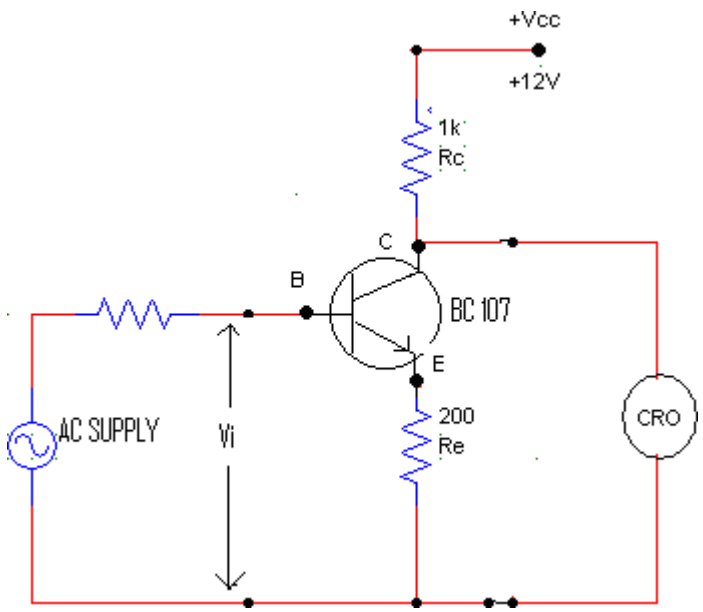

MODEL GRAPH:

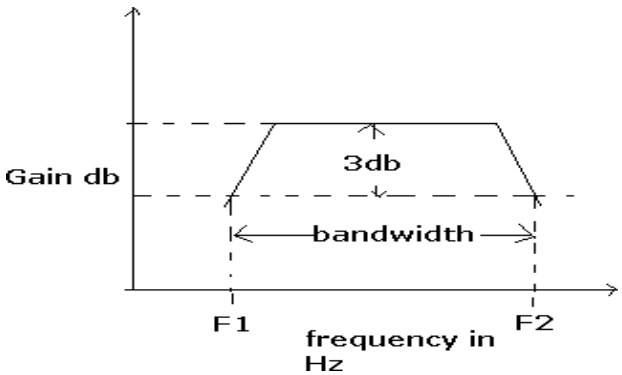

EX NO:11 DESIGN AND TESTING OF FEEDBACK AMPLIFIERS (ANY ONE TYPE) - VOLTAGE SERIES FEEDBACK AMPLIFIER

AIM: To design and find the frequency response of voltage series feedback amplifier.

COMPONENTS REQUIRED::

S.NO	Name of the Component	Specification/Range	Quantity
1	Breadboard	-	1
2	Resistors	10k, 11k, 200Ω, 283 Ω	1each
3	Capacitors	1μF 10μF	2 1
4	Transistor	BC107	
5	CRO	0-30MHz	1
6	RPS	0-10V	1
7	Digital multimeter		1

THEORY

The feedback voltage is connected in series with the input circuit means called as voltage series amplifier. If the feedback voltage is equal to the output voltage then it is called as voltage series feedback amplifier.

PROCEDURE

1. The components are connected as shown in the circuit diagram.

2. The input voltage is given using function generator.

3. The load resistance is varied using the decade resistance box and output voltage is measured and readings are tabulated.

TABULATION:

Sl. No.	Input frequency (Hz)	Input Voltage (mV)	Output Voltage (V)	Voltage gain $V_{gain} = 20\log\left(\frac{V_o}{V_i}\right) \quad db$

POST-LAB EXERCISE:

1. List out the types of feedback circuits.
2. Write the advantages of negative feedback.
3. Write the disadvantages of negative feedback
4. Classify the feedback amplifiers.
5. What is feedback amplifier?

RESULT:

Thus the voltage series feedback amplifier was designed and its frequency response was observed.

CIRCUIT DIAGRAM:

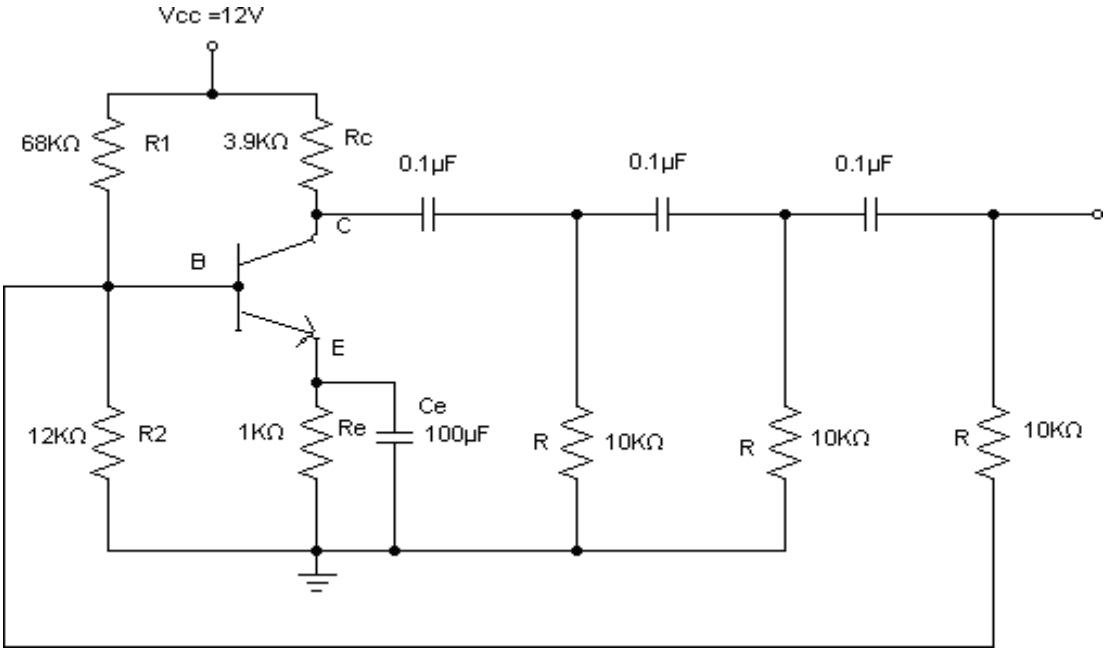

MODEL GRAPH:

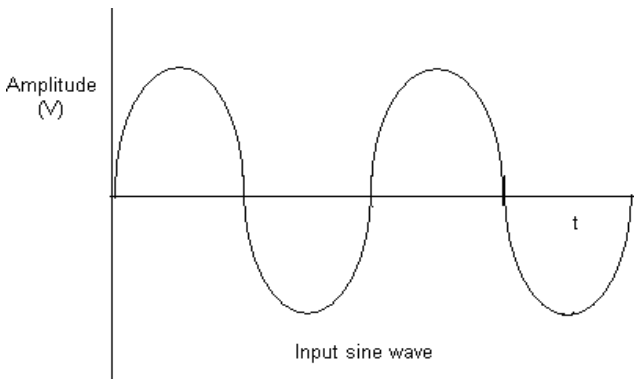

EX NO 12 a: DESIGN AND TESTING OF RC PHASE SHIFT OSCILLATORS.

AIM: To design a RC phase shift oscillator and to observe its output waveform.

COMPONENTS REQUIRED::

S.NO	Name of the Component	Specification/Range	Quantity
1.	OPAMP	IC74	1
2.	Resistors	1.2KΩ, 13KΩ,377Ω,12.5KΩ	3,Each1
3.	Capacitors	0.1µF	3
4.	RPS	±12V	1
5	CRO	1MHz	1
6.	Connecting wires	-	Req.

DESIGN

- Frequency of oscillator F=1//2πRC.
- Assume C and find R to prevent loading of the amplifier by RC network$R_1 \leq 10R$.

THEORY:

The amplifier stage is self biased with a capacitor by passed source resistor (Rs) and drain bias resistor (R_d). the expression for voltage gain of the amplifier is given by $A_v = g_m . r_l$. The feedback network consists of three identical RC sections. Each section produces a phase shift of 60°. Therefore the net phase shift of the feedback network is 180 degree. Since the amplifier stage also introduces a phase shift of 180°, therefore total phase shift is 360° or 0°. For the variable frequency oscillators, the three capacitors are ganged and varied simultaneously. When the circuit is energized by switching on the supply, the circuit starts oscillating. The oscillations may start due to the minor variation in dc supply or inherent noise.

PROCEDURE:

1. Hook up the circuit as shown in the circuit diagram.
2. Switch on the power supply.
3. Observe the output waveform in CRO.

TABULATION:

Amplitude(Volts)	Time(ms)	Frequency (KHz)

POST-LAB EXERCISE:

1. What is amplifier?
2. What is amplification?
3. List the disadvantages of Rc phase shift Oscillator.
4. What is the difference between amplifier and oscillator/

RESULT:

Thus the RC phase shift oscillator was designed and its output waveform was verified.

CIRCUIT DIAGRAM: COLPITTS OSCILLATOR

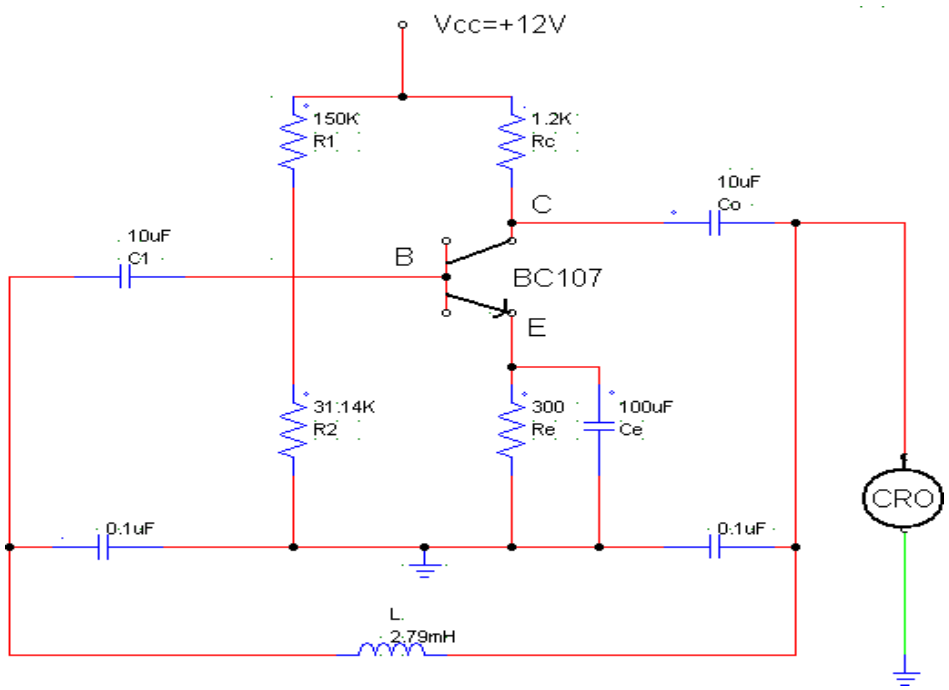

MODEL GRAPH:

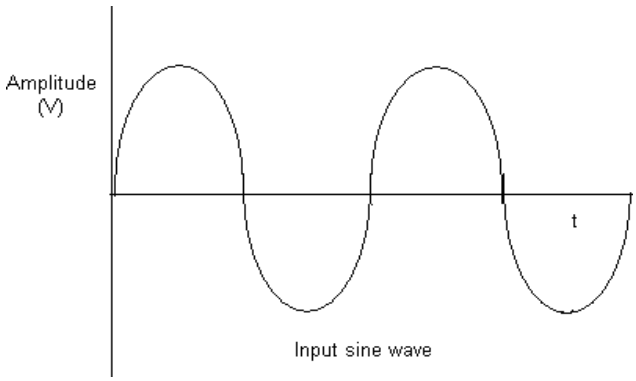

EX NO 12 b: DESIGN AND TESTING OF LC OSCILLATOR - COLPITTS OSCILLATOR.

AIM: To design a Colpitts oscillator and to observe its output waveform.

COMPONENTS REQUIRED::

S.NO	Name of the Component	Specification/Range	Quantity
1.	Transistor	BC 107	1
2.	Resistors	11.64 KΩ, 552.2Ω,10.02KΩ1.67kΩ	Each 1
3.	Capacitors	53.5nF,80µF, 100mF	2,1,1
4.	Inductor	0.78mH	1
5.	RPS	±12V	1
6.	CRO	1MHz	1
7.	Connecting wires	-	Req.

DESIGN

Select a appropriate transistor and note down its specification such as V_{CE},$I_{C(MAX)}$, $h_{fe(min)}$ and $V_{be(sat)}$.

- $V_{CC}= V_{CEQ}$
- $R_2=S^* R_E$
- $V_{CC}[R_2/(R_1+ R_2)= V_{BE}+V_{BE(SAT)}$
- $V_{R1}+V_{R2}=V_{CC}$
- $h_{fe} \geq C_1^* C_2/(C_1+ C_1)$
- $X_{CE} \leq R_E/10$

THEORY:

The resistors R1, R2 and Re provide necessary bias condition for the circuit. The capacitor Ce provides a.c. ground thereby providing any signal degeneration. This also provides temperature stabilization.

The capacitors Cc and Cb are employed to block d.c. and to provide an a.c. path. The radio frequency choke (R.F.C) offers very high impedance to high frequency currents which means it shorts for d.c. and opens for a.c. Hence it provides d.c. load for collector and keeps a.c. currents out of d.c. supply source.

The frequency determining network is a parallel resonant circuit which consists of variable capacitors C1 and C2 along with an inductor L. The junction of C1 and C2 are

earthed. The capacitor C1 has its one end connected to base via Cc and the other to emitter via Ce. the voltage developed across C1 provides the regenerative feedback required for the sustained oscillations.

PROCEDURE:

1. Hook up the circuit as shown in the circuit diagram.
2. Switch on the power supply.
3. Slight modification in value of L_1 and L_2 can be made to get perfect sinewave output.
4. Observe the output waveform in CRO.

TABULATION:

Amplitude(Volts)	Time(ms)	Frequency (KHz)

POST-LAB EXERCISE:

1.What is an oscillator?

2.List the disadvantages of colpitts Oscillator.

3.What are parasitic Oscillators?

4.What is damped Oscillation?

RESULT:

Thus the Colpitts oscillator was designed and its output waveform was verified.

EX NO 13: SIMULATION OF RECTIFIER CIRCUITS USING SIMULINK

FULL WAVE RECTIFIER

AIM: To plot Output waveform of the Full Wave Rectifier using MATLAB SIMULINK

COMPONENTS REQUIRED:

PC,MATLAB SOFTWARE

FULL WAVE RECTIFIER SIMULATION IN SIMULINK

Open MATLAB and then open Simulink using the Simulink icon on MATLAB, as we have been doing in previous tutorials. Create a new blank model and save it first so we can access it in the future. Now, click on the library browser icon on the recently created Simulink model. And in the library browser's search bar, type **"diode"**, as we can see in the figure below. Remember that diodes are the main component in any type of rectifier, and here we are going to design a full wave rectifier. As the half wave rectifier is simpler, we will leave it to you for practice purposes.

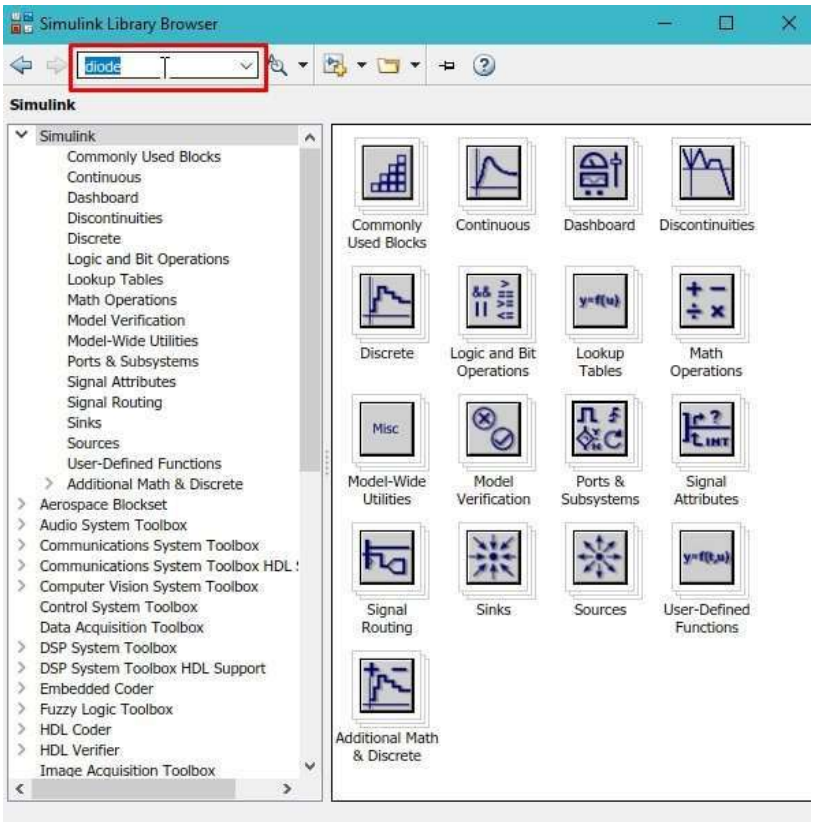

Diode search

From the list of diodes, select the most suitable diode. We prefer to select the one with protection, as shown in the figure below.

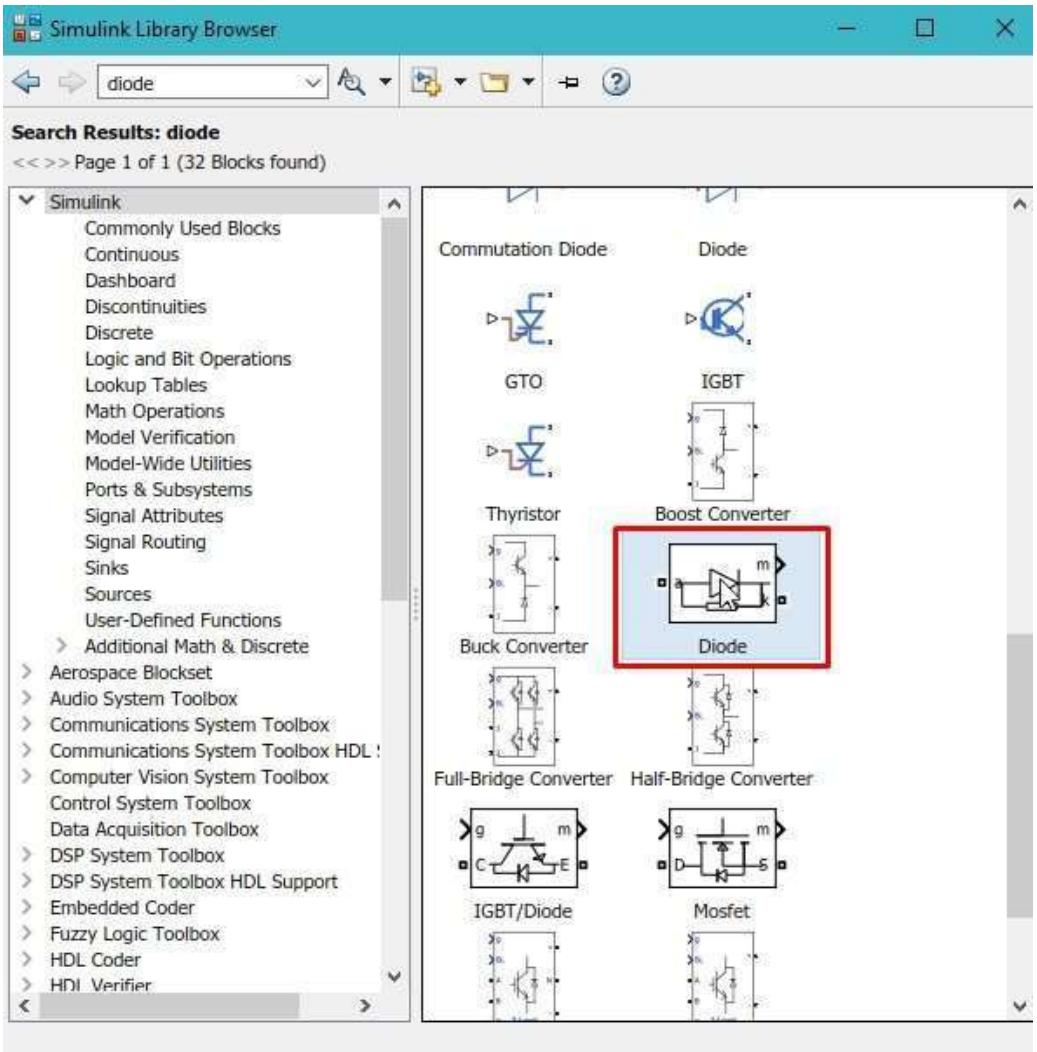

Diode

FULL WAVE RECTIFIER BRIDGE

Place four such diodes. Those who are familiar with rectifiers must know that in a full wave rectifier, there is a bridge of diodes. This bridge is made up of four diodes; hence, place four such diodes. Place two pairs of diodes in series, then connect these two pairs in parallel as shown in the figure below

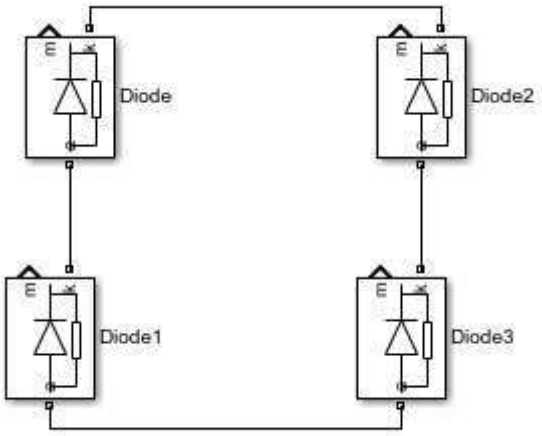

Bridge

Now, click anywhere on the screen, and from the search box, search for the AC voltage source as we have done previously, as shown in the figure below.

AC voltage source

Connect the positive side of the AC source between the two serially connected diodes and the negative side to other serially connected diodes, as shown in the figure below.

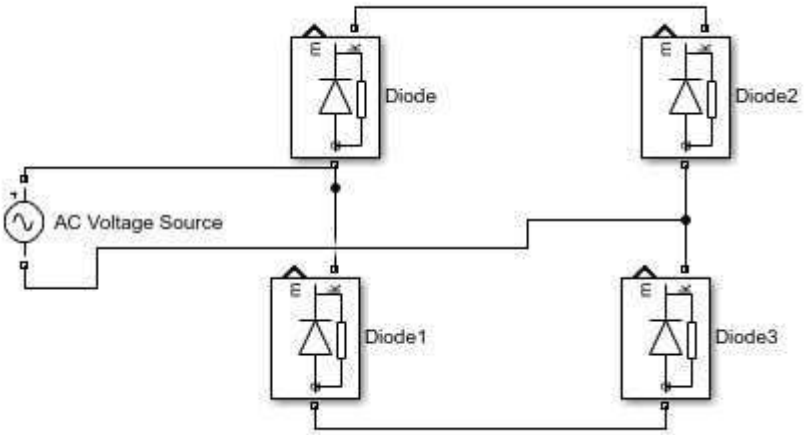

Sources

After the source is connected, we also need a ground to complete the circuit. We will search for it, as shown in the figure below.

Ground search

Placing and Configuring RLC branch

Connect the ground to the bottom of the circuit. Now, from the search bar, search for the series RLC branch. Refer to the figure below.

Learn more

RLC branch search

Now, we add the RLC block to the model. After this, double-click on the RLC branch, and from the parameters block, select the resistor branch only, as shown in the figure below.

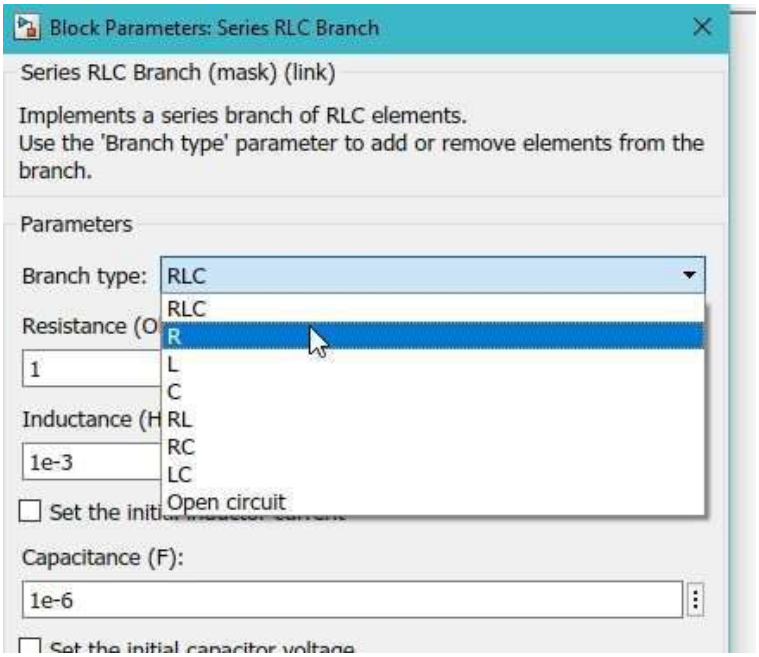

Resistor branch

Connect this resistor branch to the load of the bridge rectifier, and the diagram with the load connected will look like the one shown in the figure below.

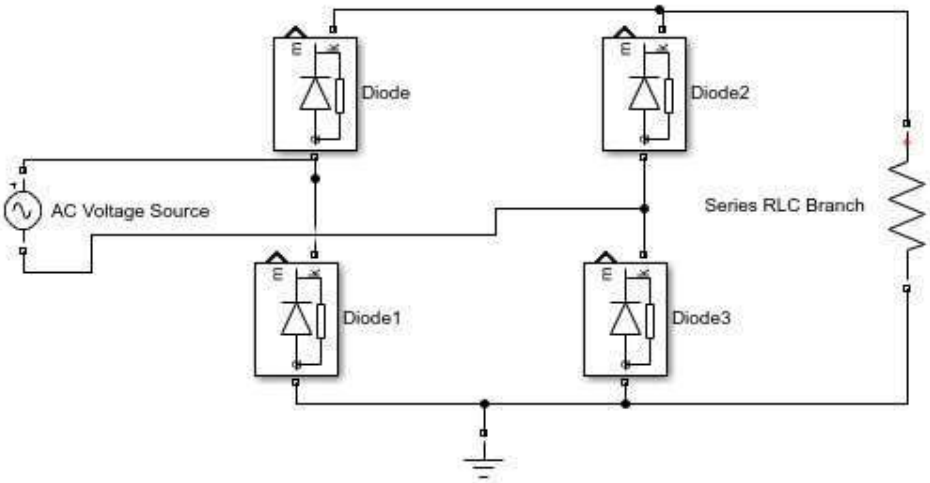

Diagram

Now we need to set the input parameters of the AC voltage source. Double-click on the input voltage source and set the peak amplitude of the voltage to 10 V, as shown in the figure below.

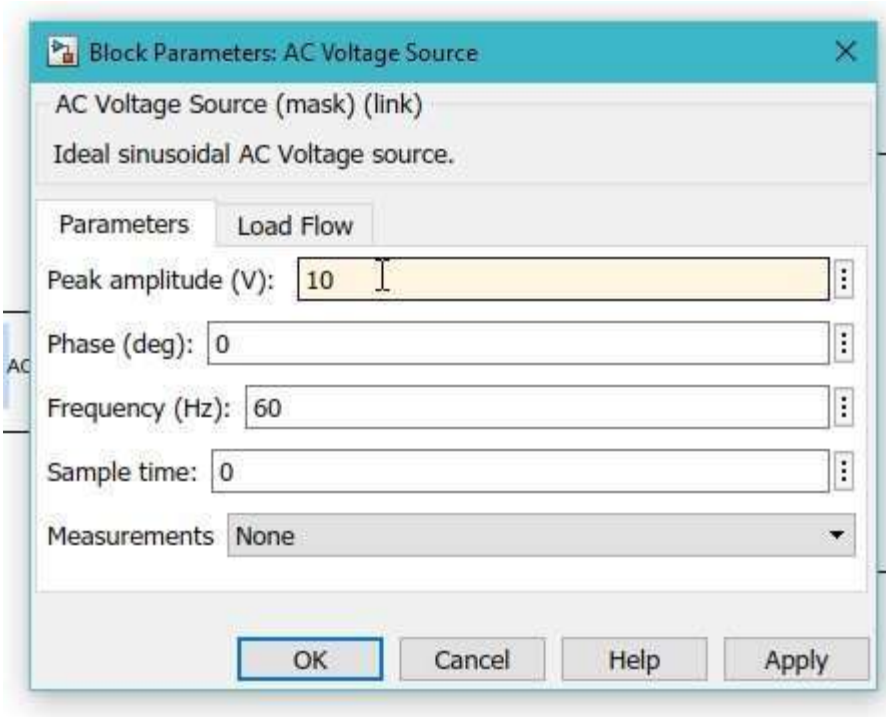

AC parameters

Now, if we run this block diagram, we will encounter an error for the requirement of a power GUI. Power GUI is a block that is essential in Simulink to run an electronic circuit. In the search bar, search **"powergui"**, as shown in the figure below.

Power GUI

Setting Voltmeter

Next, we need a voltage measuring device in order to see the voltage waveform at the output. Again, in the search bar, write voltage measurement, as shown in the figure below.

Searching voltmeter

Place two such voltmeters on the model. Connect one of the voltmeters across the load resistor, as we are basically interested in measuring and viewing the voltage waveform at the load resistor. Refer to the figure to see how to connect the voltmeter to the load.

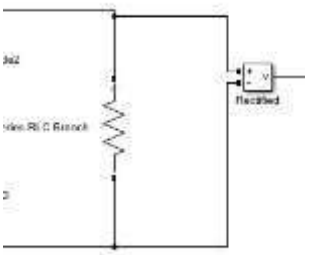

Load voltmeter

Also, we need a reference waveform to compare the output at the load with. Therefore, we will also measure the voltage at the input by connecting a voltmeter across the input AC source, as shown in the figure below.

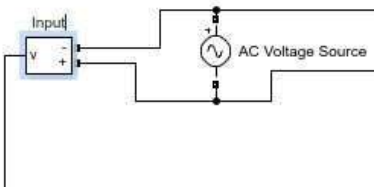

Input voltmeter

Now, we need to see the waveform at the load and the input to visualize what actually happens in a rectifier. To visualize a waveform, we need to use an oscilloscope. In the search bar's search scope, as shown in the figure below

Scope

Simulink Model

Place the block on the model near the load. We want to view two waveforms, one of the input and the other of the output. Therefore, we need two input ports in scope. Change the number of input ports in the scope to two, At the two input ports, connect the input voltmeter and the output load voltmeter, as shown in the figure below.

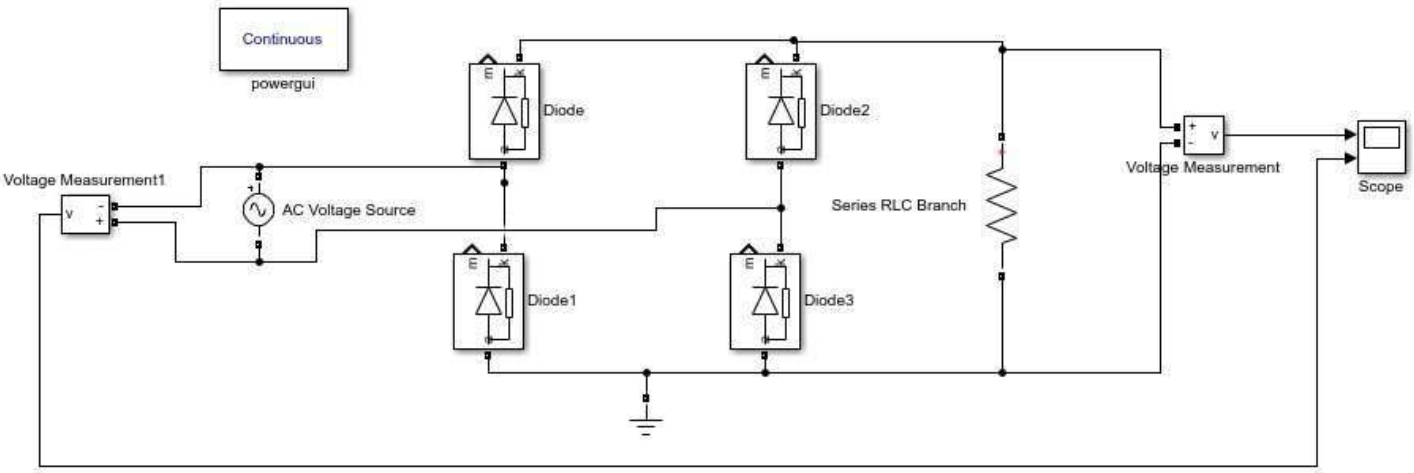

Complete block diagram

Run the model by pressing the run button and then double-clicking on the scope. We want to see the legends on the waveform displayed by scope; hence, click on the view button and check the legends label as shown in the figure below.

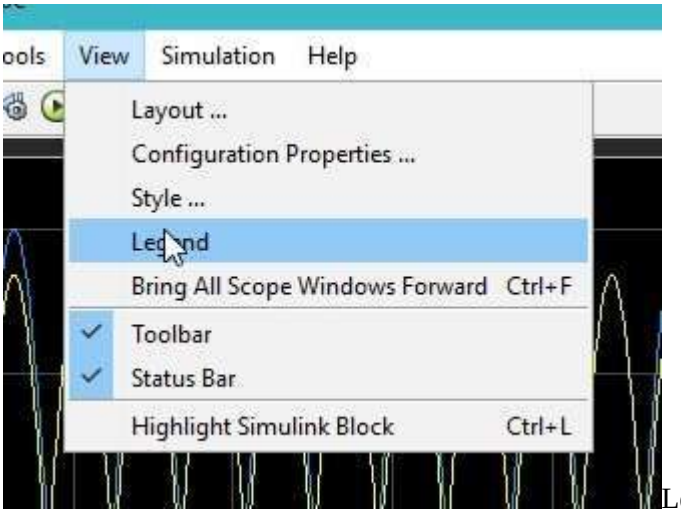

Legends

Simulation

The rectified output at the load and the input AC are both shown in the figure below.

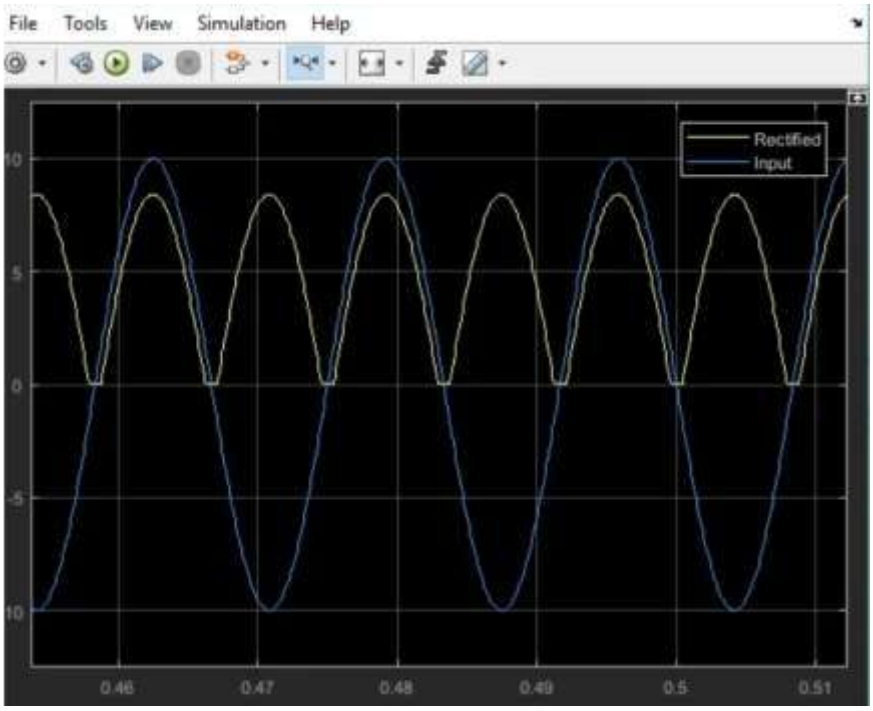

Rectified output

The output is a pulsating DC. It can be converted to plain DC by using filters and regulators.

CIRCUIT DIAGRAM

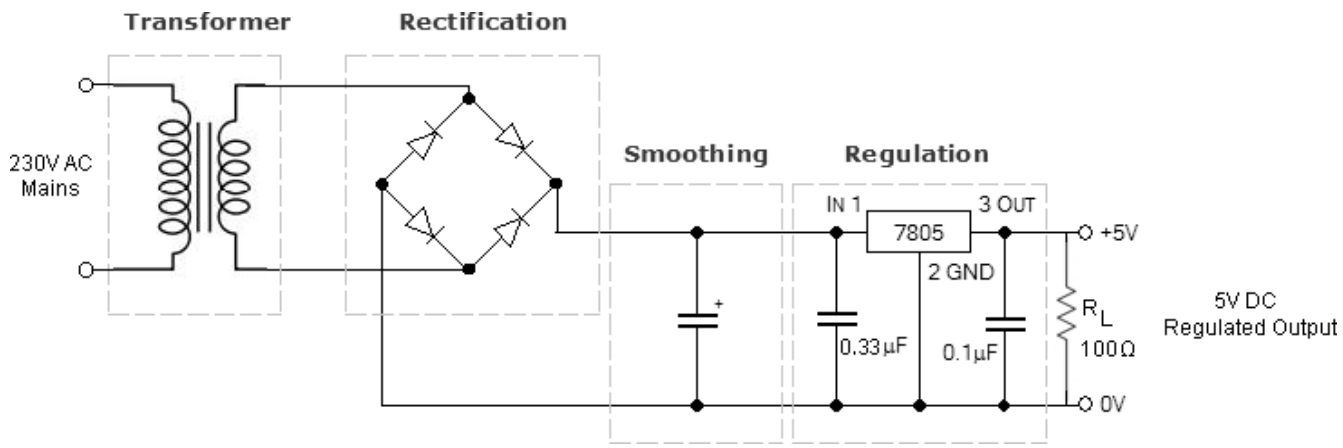

Result:

Thus the Output waveform of the Full Wave Rectifieris obtained using MATLAB SIMULINK

EXPT. NO: 14 DESIGN OF REGULATED POWER SUPPLY

AIM:

To design a +5 V DC regulated power supply delivering up to 1A of current to the load. Also to determine the load regulation and efficiency of the regulated power supply.

COMPONENTS REQUIRED:

S.NO	Name of the Component	Specification/Range	Quantity
1.	Diode	1N4007	04
2.	IC	IC7805	01
3.	Step down transformer	230 V/ 9 V, 1A	01
4.	Resistor	100Ω	01
5.	Capacitor	0.33μF, 0.1μF	Each 1
6.	Electrolytic Capacitor	1000μF/25V	01
7.	Function Generator	3 MHz	01
8.	RPS	(0-30)V	01
9.	CRO	30 MHz	01
10.	Bread Board		01
11.	Connecting Wires	Single stand	few

THEORY:

Every electronic circuit is designed to operate off of supply voltage, which is usually constant. A regulated power supply provides this constant DC output voltage and continuously holds the output voltage at the design value regardless of changes in load current or input voltage.

The power supply contains a rectifier, filter, and regulator. The rectifier changes the AC input voltage to pulsating DC voltage. The filter section removes the ripple component and provides an unregulated DC voltage to the regulator section. The regulator is designed to deliver a constant voltage to the load under varying circuit conditions. The two factors that can cause the voltage across the load to vary are fluctuations in input voltage and changes in load current requirements.

Load regulation is a measurement of power supply, showing its capacity to maintain a constant voltage across the load with changes in load current. Line regulation is a measurement of power supply, showing its capacity to maintain a constant output voltage with changes in input voltage.

DESIGN

Design a 5 V DC regulated power supply to deliver up to 1A of current to the load with 5% ripple. The input supply is 50Hz at 230 V AC.

Selection of Voltage regulator IC:

Fixed voltage linear IC regulators are available in a variation of voltages ranging from -24V to +24V. The current handling capacity of these ICs ranges from 0.1A to 3A. Positive fixed voltage regulator ICs have the part number as 78XX. The design requires 5V fixed DC

voltage, so 7805 regulator IC rated for 1A of output current is selected.

Selection of Bypass Capacitors:

The data sheet on the 7805 series of regulators states that for best stability, the input bypass capacitor should be 0.33µF. The input bypass capacitor is needed even if the filter capacitor is used. The large electrolytic capacitor will have high internal inductance and will not function as a high frequency bypass; therefore, a small capacitor with good high frequency response is required. The output bypass capacitor improves the transient response of the regulator and the data sheet recommends a value of 0.1µF.

Dropout voltage:

The dropout voltage for any regulator states the minimum allowable difference between output and input voltages if the output is to be maintained at the correct level. For 7805, the dropout voltage at the input of the regulator IC is Vo +2.5 V.

$$V_{dropout} = 5+2.5 = 7.5V$$

Selection of Filter Capacitor:

The filter section should have a voltage of at least 7.5V as input to regulator IC.

That is Vdc = 7.5 V

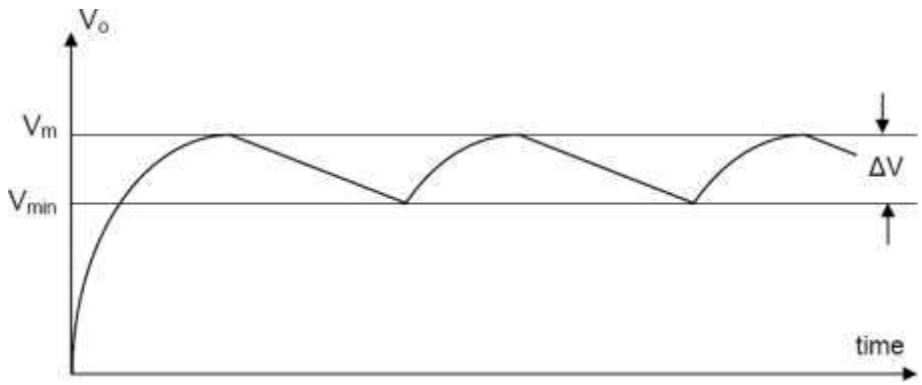

Figure 2: Output wave shape from a full-wave filtered rectifier

Ripple voltage = ΔV = Vr

Two figures of merit for power supplies are the ripple voltage, Vr, and the ripple factor, RF.

RF = Vr(rms) / Vdc $\qquad v_{r\,(rms)} = \frac{v_m - v_{min}}{2\sqrt{3}} = \frac{v_r}{2\sqrt{3}}$

V_{dc} = 2Vm/π = 0.636 Vm

$$v_{dc} = v_m - \frac{v_r}{2} = \frac{v_m + v_{min}}{2}$$

Vr = IL x Toff/C can be solved for the value of C.
The ripple frequency of the full-wave ripple is 100 Hz. The off-time of the diodes for 100 Hz ripple is assumed to be 85%. Toff = 8.5mS.
C = IL x Toff / Vr

Selection of Diodes:

1N4007 diodes are used as it is capable of withstanding a higher reverse voltage, PIV of 1000V whereas 1N4001 has PIV of 50V.

Selection of Transformer:

Maximum unregulated voltage, Vunreg(max) = Vdropout + Vr =
Two diodes conduct in the full-wave bridge rectifier, therefore peak of the secondary voltage must be two diode drops higher than the peak of the unregulated DC.

Vsec(peak) = Vunreg(max) + 1.4V =

Vsec(rms) = 0.707 x Vsec(peak) =

The power supply is designed to deliver 1A of load current, so the secondary winding of the transformer needs to be rated for 1A.

PROCEDURE:

1. Power Supply

1. Connect the circuit as shown in Figure 1 .
2. Apply 230V AC from the mains supply.
3. Observe the following waveforms using oscilloscope
   (i) Waveform at the secondary of the transformer
   (ii) Waveform after rectification
   (iii) Waveform after filter capacitor
   (iv) Regulated DC output

Volt/div = Time/div =

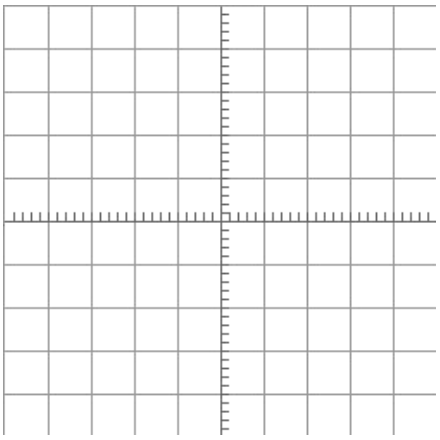

Graph 1: Waveform at the secondary of the transformer

Volt/div = Time/div =

Volt/div = Time/div=

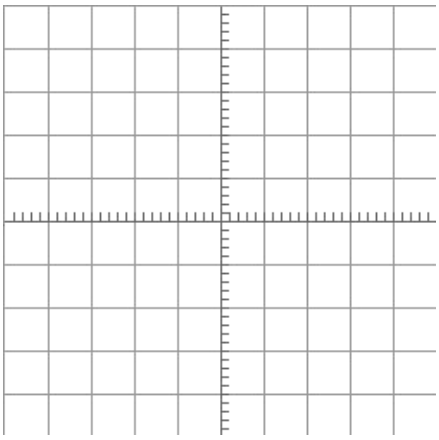

Graph 2: Waveform after rectification

Volt/div = Time/div=

2. Load Regulation

1. Observe the No load voltage and Full load voltage
2. Calculate the load regulation.

Load Regulation = ((VNL – VFL)/VFL) x 100 %

Theoretical efficiency of linear voltage regulator =

POST-LAB EXERCISE

1. Why is the ripple voltage larger at full load?
2. Under full load conditions, what is the power dissipated by the regulator IC?
3. Comment on the efficiency of the circuit for a minimum output voltage and a maximum output voltage.
4. Identify the short-circuit current of 7805 from data sheets.
5. What modification needs to be done to obtain a variable output voltage?

RESULT:

Thus the +5 V DC regulated power supply was designed and also the load regulation and efficiency of the regulated power supply was determined.