SRM VALLIAMMAI ENGINEERING COLLEGE

(An Autonomous Institution)

SRM Nagar, Kattankulathur – 603203.

DEPARTMENT OF CIVIL ENGINEERING

LABORATORYMANUAL

(2023 Regulation)

BRANCH	**: Common to All Branches**
SEMESTER	**: I**
SUBJECTCODE	**: GE3134**
SUBJECT	**: Engineering Practices Laboratory (Group A: Civil)**
ACADEMIC YEAR	**: 2026-27 ODD**

Prepared by,

T. R. BANU CHANDER, M.E.,
ASST. PROF / CIVIL

PREFACE

Laboratory work is a prominent feature of education in Science and Technology based subjects. However, it should not be forgotten that practice without theory is blind and Theory without practice is lame. A person interested in acquiring engineering skills must have a balanced knowledge of theory as well as practice. Thus, engineering practice, a study and practice of the scientific principles underlying the art of manufacture.

This manual is prepared in accordance with the latest syllabus of SRM Valliammai Engineering College for Engineering Practice - Civil laboratory.

WORKSHOP SAFETY PRECAUTIONS

WORKSHOP:

It is a place where the man, the machine and the tool works together for manufacturing a product. It is the place where the raw material is converted into a new product.

GENERAL INSTRUCTIONS:

1. Always prefer to use leather shoes.
2. Never use loose clothes.
3. Full sleeve shirts should be avoided.
4. Never use neck tie while working.
5. Never mix the Measuring tools with cutting tools.
6. Keep the surroundings clean.
7. Every tool should have a proper place and it should be kept at its proper place after use.
8. Always wear lab coats.

GE3134 ENGINEERING PRACTICES LABORATORY L T P C
0 0 4 2

OBJECTIVES:

To provide exposure to the students with hands on experience on various basic engineering practices in Civil, Mechanical, Electrical and Electronics Engineering.

GROUP A (CIVIL & MECHANICAL)

I CIVIL ENGINEERING PRACTICE 15

Buildings:

a) Study of plumbing and carpentry components of residential and industrial buildings. Safety aspects.

Plumbing Works:

a) Study of pipeline joints, its location and functions: valves, taps, couplings, unions, reducers, elbows in household fittings.
b) Study of pipe connections requirements for pumps and turbines.
c) Preparation of plumbing line sketches for water supply and sewage works.
d) Hands-on-exercise:
Basic pipe connections – Mixed pipe material connection – Pipe connections with different joining components.
e) Demonstration of plumbing requirements of high-rise buildings.

Carpentry using Manual Tools only:

a) Study of the joints in roofs, doors, windows and furniture.
b) Hands-on-exercise: Wood work, joints by sawing, planing and cutting.

INDEX

S.No	Date	Name of the Experiment	Page No.	Marks (10)	Faculty Signature
1		Planing			
2		Tee Lap Joint			
3		Dove Tail Joint			
4		Cross Lap Joint			
5		Pipe Threading			
6		Pipe line to Wash Basin			

CARPENTRY

CARPENTRY

INTRODUCTION

Carpentry may be defined as the process of making wooden articles and components such as doors, windows, Furniture etc. Carpentry involves cutting, shaping and fastening wood and other materials together to produce a finished product. Preparation of joints is one of the important operations in wood work.

Joinery denotes connecting the wooden parts using different points such as lap joints, mortise and tenan joints, bridle joints, etc.

TIMBER

Timber is the material used for carpentry. It is the name given to the wood obtained from well grown trees called exogenous trees. Timber is made suitable for engineering purposes by sawing into various sizes.

ADVANTAGES OF TIMBER

- It is easily available
- It is lighter and stronger to use
- It responds well for polishing and painting
- Suitable for sound proof construction
- It is easy to work with tools
- It is very economic

Classification of Timber

1. SOFT WOOD

- It is obtained from trees having long needle shaped leaves
- It is light in weight
- It is easy to work
- It is relatively less durable
- It has good tensile resistance and poor shear resistance
- It has straight fibers and fine texture
- It is widely used for construction

2. HARD WOOD

- It is obtained from trees having broad leaves
- It is heavier in weight and dark in colour
- It is difficult to work
- It is highly durable
- Its fibers are quiet close and compact
- It has both tensile and shear resistance
- It widely used for doors, windows and furniture

STUDY OF CARPENTRY TOOLS

Carpentry tools are used to produce components to an exact size. The types of carpentry tools are as follows.

1. Marking tools	2.Measuring tools	3. Holding tools
4. Cutting tools	5.Planing tools	6.Boring tools
7. Striking tools	8.Miscellaneous tools	

MARKING TOOLS

Accurate marking is important in carpentry to produce components to exact size.

1. Marking gauge

It consists of a square wooden stem with a sliding wooden stock on it. On the stem, a marking pin is attached which is made up of steel. This stem is provided with a steel nail to scratch the surface of the work.

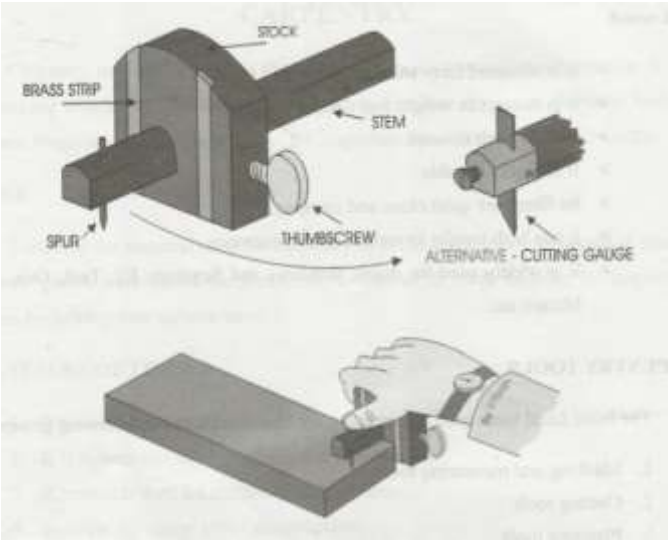

Marking gauge

2. Mortise gauge

It consists of two pins; the distance between the pins is adjustable. It is used to draw parallel lines on the stock.

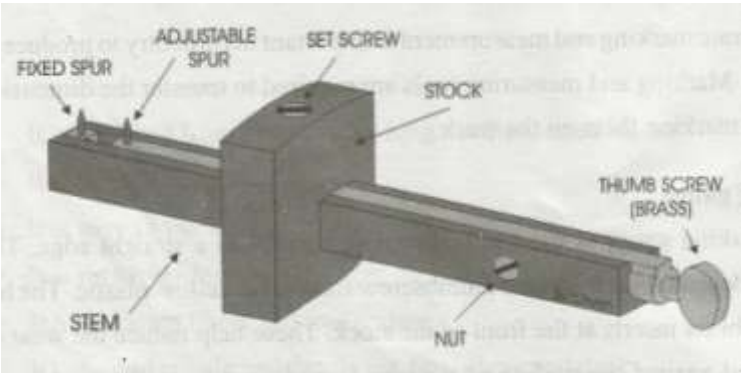

Mortise gauge

3. Try Square

The engineer's try-square is composed of two parts, the stock and the blade. They are usually made from mild steel with blade being hardened and tempered to resist damage. The try square is pushed against a straight side of the material. An engineer's scriber is then used to scratch a line onto the surface of the material.

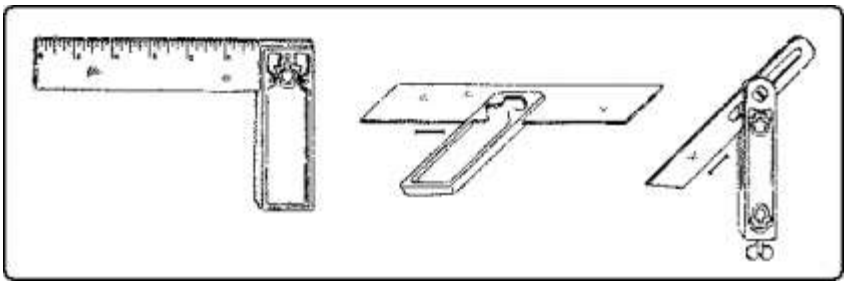

4. Scriber

A Scriber is a hand tool used to mark lines on work pieces. This is used instead of pencil. They consist simply of a rod of high carbon steel with a sharpened point.

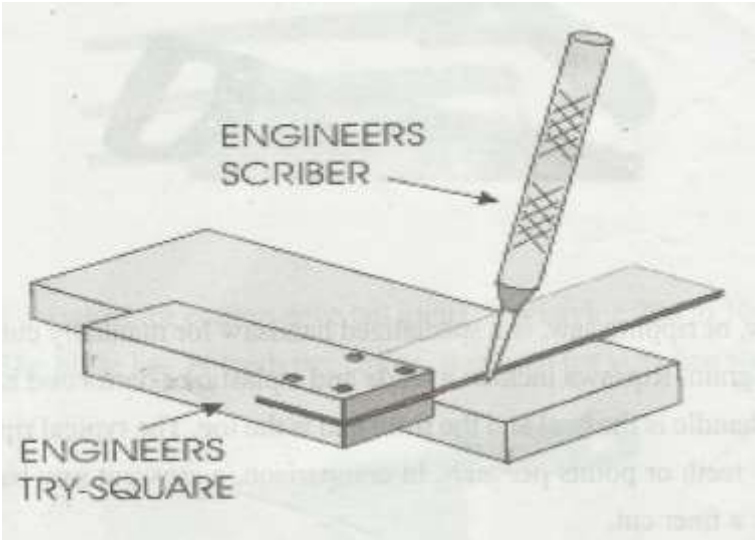

5. Spirit level

Spirit levels are used for testing the position of large surfaces. It is used for testing horizontal position of the work pieces. It is having a glass tube with air bubble.

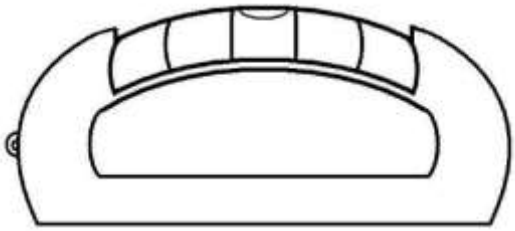

Spirit level

MEASURING TOOLS

The carpentry measuring tools are used to measure the dimensions in the wood for exact measurement in cutting.

1. Carpenter's steel rule

Large measurements can be made by steel rule. It is also suitable for measuring circumference of curved surfaces.

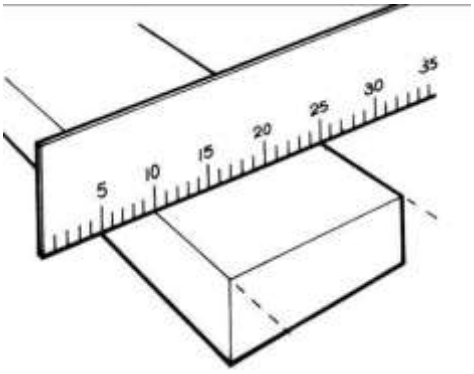

Steel Ruler

HOLDING TOOLS

The carpentry holding tools are shown in figure

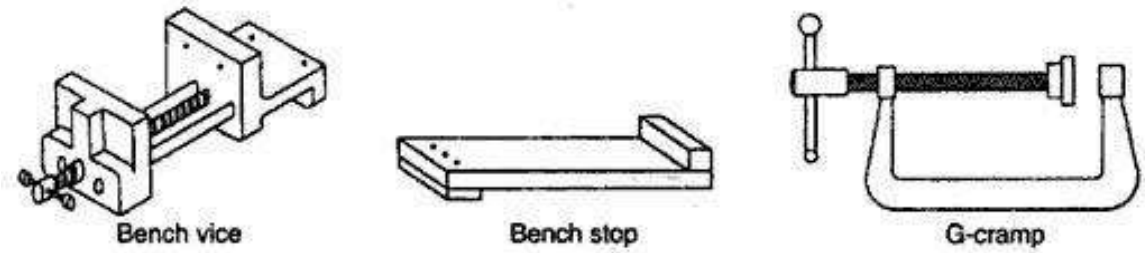

Holding tools.

1. Carpentry vice or Bench vice

A carpentry vice is the common work holding device. It consists of one fixed jaw and one movable jaw. Its one jaw is fixed to the side of the table while the other is movable by means of a screw and a handle.

2. Bench stop

It is a simple straight flat plank of wood having two projected rectangular sections of wood screwed on opposite side of the plank. The work is placed in such a way that it is always butting against the projected portion so as to resist the work from moving.

3. G-clamp

G-clamp is made up of malleable iron with acme threads of high quality steel .It can be used for clamping small work when gluing up.

CUTTING TOOLS

1. Saws

A saw is used to cut wood into pieces. There is different type of saws, designed to suit different purpose. A saw is specified by the length of its tooled edge. The following saws are used in the carpentry section.

Rip Saw

The blade of rip saw is either straight or skew-backed. The teeth are so set that the cutting edge of this saw makes a steeper angle about 60^0

Cross Cut saw

This is similar in shape of a rip saw. It is used to cut across the grain of the stock. The correct angle for cross cutting is 45^0.The teeth are so set that the saw kerfs is wider than the blade thickness. This allows the blade to move freely in the cut without sticking.

Tenon or back saw

A tenon saw is used for fine and accurate work. It consists of a very fine blade, which is reinforced with a rigid steel back. The teeth are shaped like those of cross cut saw.

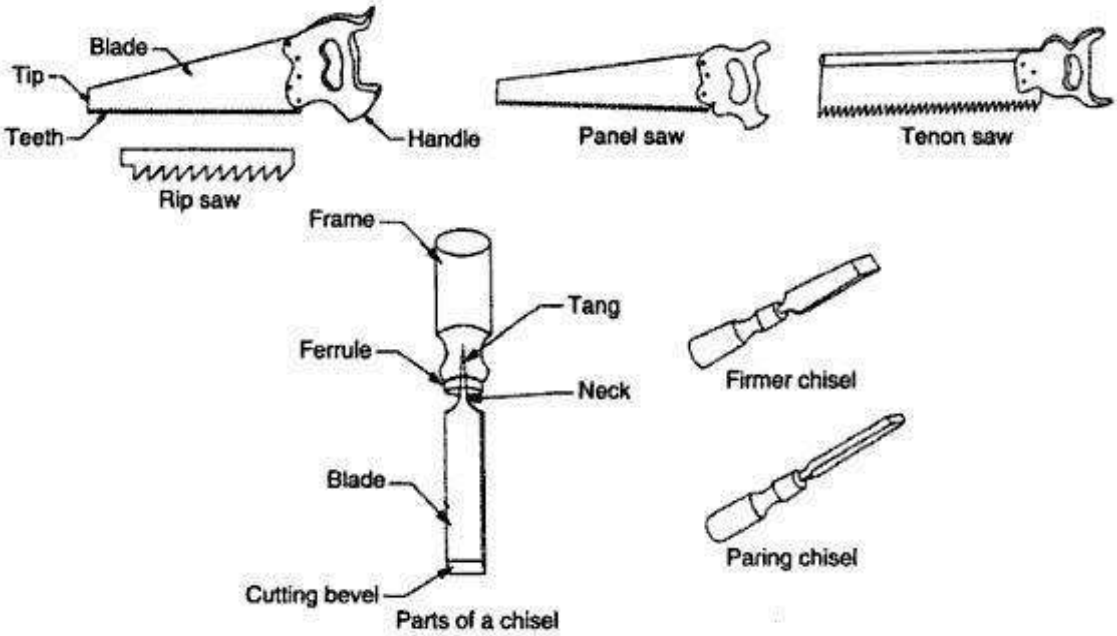

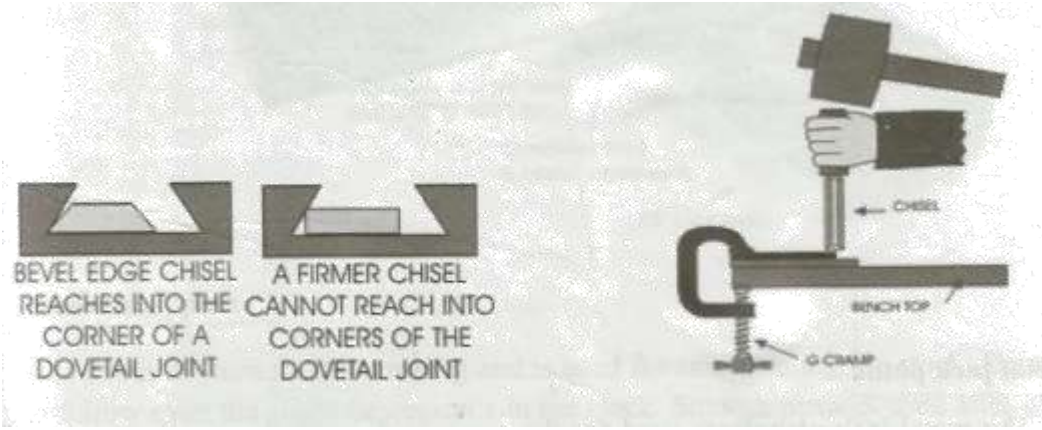

2. Chisels

Chisels are used for cutting and shaping wood accurately. Wood chisels are made in various blade widths, ranging from 3 to 50mm. Most of the wood chisels are made into tang type, having a steel shank which fits inside the handle.

Firmer chisels

These are general purpose chisels and are used either by hand pressure or by a mallet. The blade of a firmer chisel is flat and their sloping face is at an angle 15^0 to 52^0.

Mortise Chisels

These are general purpose chisels and are used for cutting mortises above 9mm wide. The blade of a firmer type is in which they have a thicker section and a stronger neck. By means of this chisel we can apply more Leverage to remove waste wood from the mortise.

Bevel chisels or Dove tail chisel

A bevel chisel is similar in construction to the firmer chisel. Its edges are bevelled to allow access to difficult corners. It has a blade with a bevelled back due to which it can enter sharp corners for finishing in dove tail joints.

PLANING TOOLS

In general, planes are used to produce flat surfaces on wood. The cutting blade used in a place is very similar to a chisel. The blade of a plane is fitted in a wood or metallic block at an angle.

1. Jack plane

Jack plane which is about 35 cm long is used for general planing. A Jack plane that is about 20 to 25cm long is used for smoothening the stock. It can follow even the slight depressions in the stock better than the jack plane. Smooth plane is used after using the jack plane.

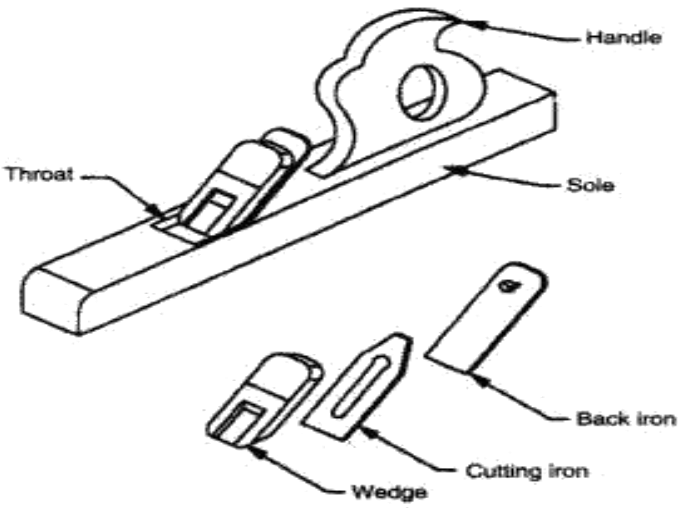

Planing tools.

Jack plane

2. Rebate plane

A rebate plane is used for making a rebate. A rebate is a recess along the edge of a piece of wood which to generally used for positioning glass in frames and doors. A plough plane is used to cut grooves, which are used to fix handle in a door.

<u>BORING TOOLS</u>

Boring tools are used to make holes in wood. Common types of boring tools are as follows.

1. Gimlet

It has cutting edges like a twist drill. It is used for boring holes with the hand pressure.

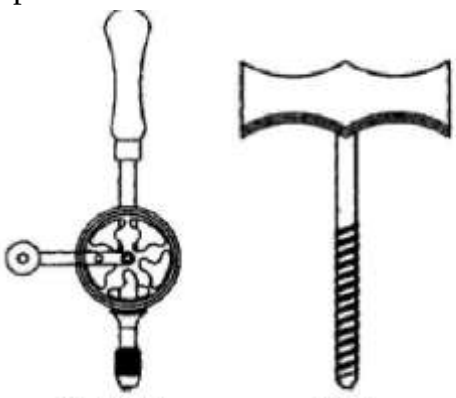

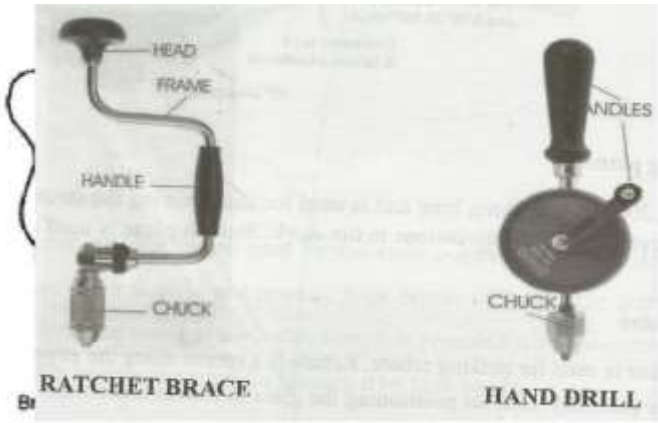

2. Hand drill

A straight shank drill is used with this tool. It is small, light in weight and may be conveniently used. The drill bit is clamped in the end.

3. Ratchet brace

It consists of crank made of steel, wooden handle in the middle, head at the top and chuck at the bottom. The bit rotates when the crank is rotated by hand.

STRIKING TOOLS

1. Hammers

The cross peen hammer is mostly used for positioning small nails. The head is tightly held in the handle with the help of iron wedges. The claw hammer is effective in removing very large nails and also for driving the nails using the other end of the hammer.

2. Mallet

A mallet is used to drive the chisel, when considerable force is to be applied, which may be the case in making deep rough cuts. A steel hammer should not be used for this purpose, as it may damage the chisel.

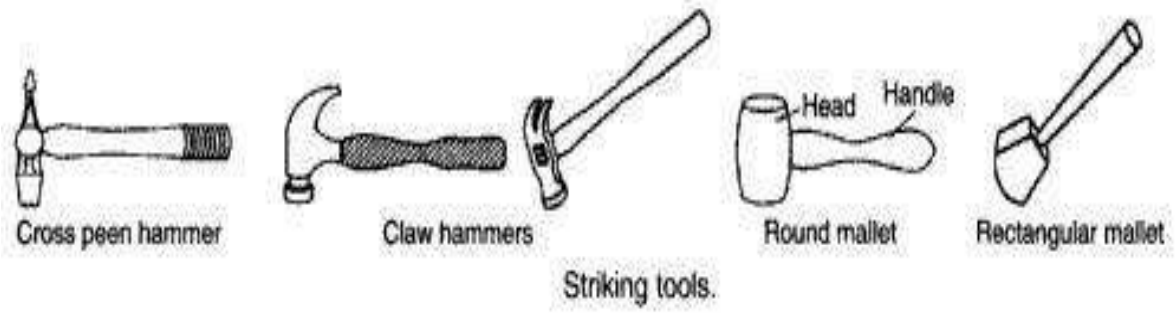

MISCELLANEOUS TOOLS

1. Pincers

They are made up of steel with a hinged joint and are used for pulling out small nails from wood.

2. Screwdrivers

Screwdriver is used for driving wood screws into wood or unscrewing them. The screwdriver used in carpentry is different from the other common types.

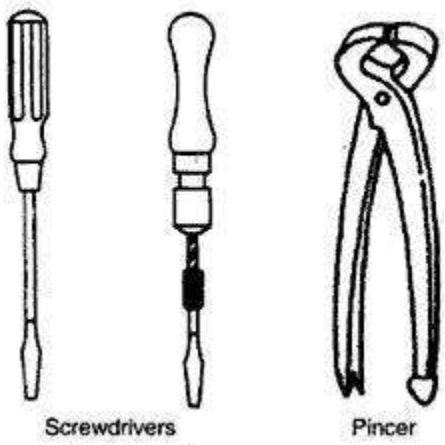

3. Rasp file

A rasp file is a file used for finishing the surface of wood. The rasp has sharp cutting teeth on its surface for this purpose. The file is used for removing rasp marks end finally the scratches left by the fix are removed with the scraper and glass paper.

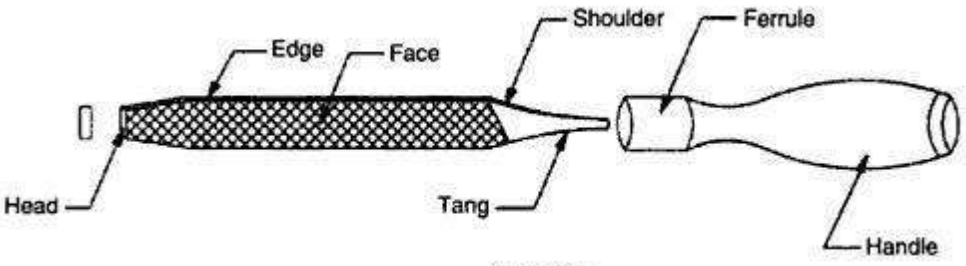

Rasp file.

4. Oil stone

This is an essential flat used for providing sharp edges on cutting tools. The oil stones may be artificial or natural stones. The carborundum is the best artificial stones where as the Arkansas are the natural stones.

CARPENTRY PROCESSES

In a carpentry shop, a number of operations are performed to get the finished workpiece. The different types of process performed in a carpentry shop can be classified as follows.

1. Marking and Measuring

It is the process of setting of dimensions on wooden pieces to obtain the required shape. This is the first step for further carpentry operations. The marking operation is done with use of marking tools. Before marking, one end is planed for reference.

2. Sawing

Sawing is the process of cutting wood to the required shape and size such as straight, inclined or curved. Sawing can be done along the grains or across the grains. In sawing, wooden work is fixed in a vice and wood is moved up to prevent vibrations during sawing.

3. Planing

Planing is an operation of obtaining, smooth, dimensionally true surface of wood by using a planer. It is done along the grains. So, smooth surface is achieved. This process can be also called facing or edging.

4. Chiseling

It is the process of cutting a small stock of wood to produce required shapes.

5. Mortising and Tenoning

Mortising is the process of producing a mortise, i.e. a rectangular or square holes and recesses in wooden pieces. A tenon is a projected piece of wood that fits into the corresponding mortise. This process is done by using mortise chisels and a mallet.

6. Boring

Boring is the process of producing through holes or blind holes in wooden piece. This process can be done straight or inclined according to the type of work. The small holes are produced by using bradawl and gimlet, whereas large holes are produced by using braces, drills.

7. Grooving

Grooving is the process of making grooves tonguing is the process of producing corresponding projections of wood for fitting into grooves. Grooving and tonguing operation can be seen in drawing boards, floor boards and partitions. Grooving is done with a plough plane tool, and tonguing is done with a moulding plane tool.

PLANING

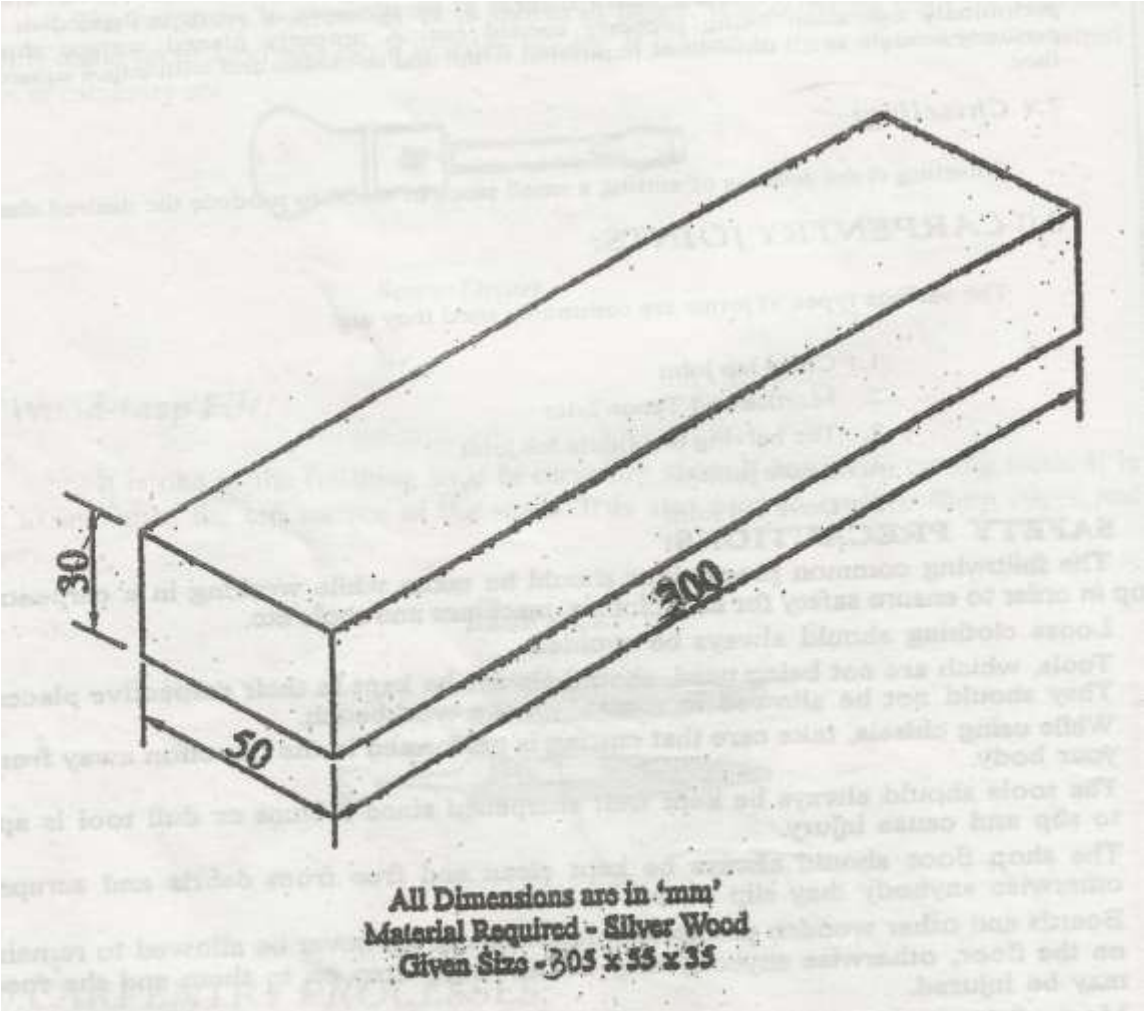
30
200
50
All Dimensions are in 'mm'
Material Required - Silver Wood
Given Size - 305 x 55 x 35

Ex.No: **PLANING** Date:

Aim

To plane the given workpiece for the required shape.

Material Required

Soft wood of size 305x55x55 mm.

Tools Required

1. Jackplane
2. Bench vice
3. Try square
4. Marking gauge
5. Steel rule
6. Tenon saw
7. Rip saw
8. Firmer chisel
9. Mallet

Procedure

1. The given workpiece is firmly clamped in the bench vice and any two adjacent surfaces are planed to get right angles using the jack plane.
2. Using the try square, the right angles of planed faces are checked.
3. Now the other two surfaces are planed to get smooth surface.
4. Based on the planed surfaces, the markings are made on the two sides by using marking gauge.
5. After marking, the workpiece is planed such that it should have required dimensions.
6. Finally, the finished job is checked for required size using the steel rule and try square.

Result

Thus the required Dimension is obtained by planing.

TEE LAP - JOINT

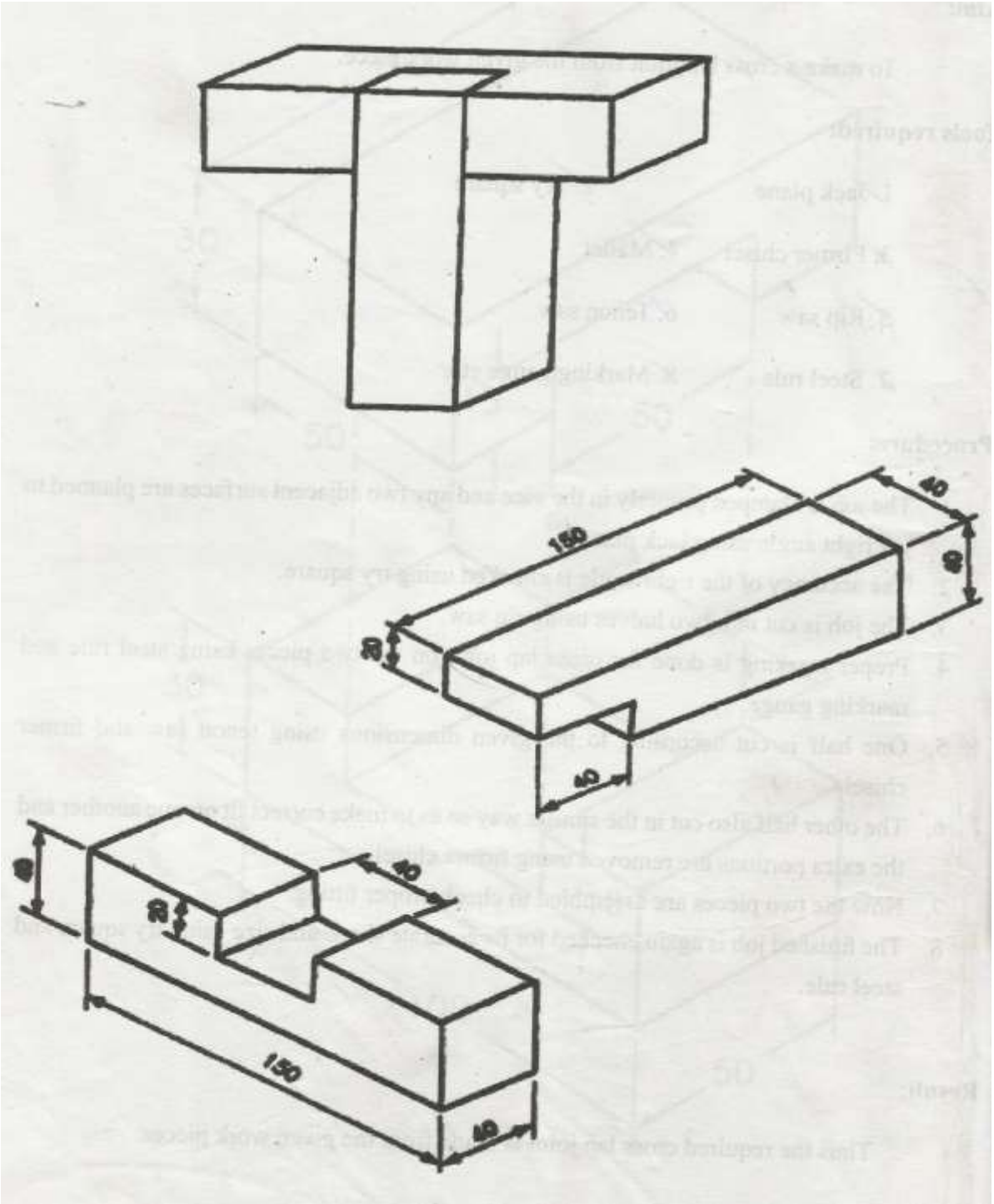

All dimensions in ‘mm’

Ex.No: **TEE LAP - JOINT** Date

Aim

To make a Tee lap –joint from the given workpiece.

Material Required

Soft wood of size 300x50x50 mm.

Tools Required

1. Jackplane
2. Bench vice
3. Try square
4. Marking gauge
5. Steel rule
6. Tenon saw
7. Rip saw
8. Firmer chisel
9. Mallet

Procedure

1. The given workpiece is firmly clamped in the carpentry vice and any two adjacent surfaces are planed to get right angles using the jack plane.
2. Using the try square, the right angles of planed faces are checked.
3. Now the other two surfaces are planed to get smooth surface.
4. The workpiece is cut into two pieces by using the rip saw.
5. Using the steel rule and marking gauge, marking is done for T-joint on the two halves.
6. In one half, the unwanted portions of wood are removed by using the tenon saw and firmer chisel. The same procedure is done for the other half of workpiece.
7. Using the jack plane, the other two faces of workpiece is planed to the required size.
8. The finished two pieces are assembled to getter to form the T-joint.
9. Finally, the finished job is checked for required size and shape using the steel rule and try square.

Result

Thus the required Tee lap -joint is obtained.

CROSS LAP JOINT

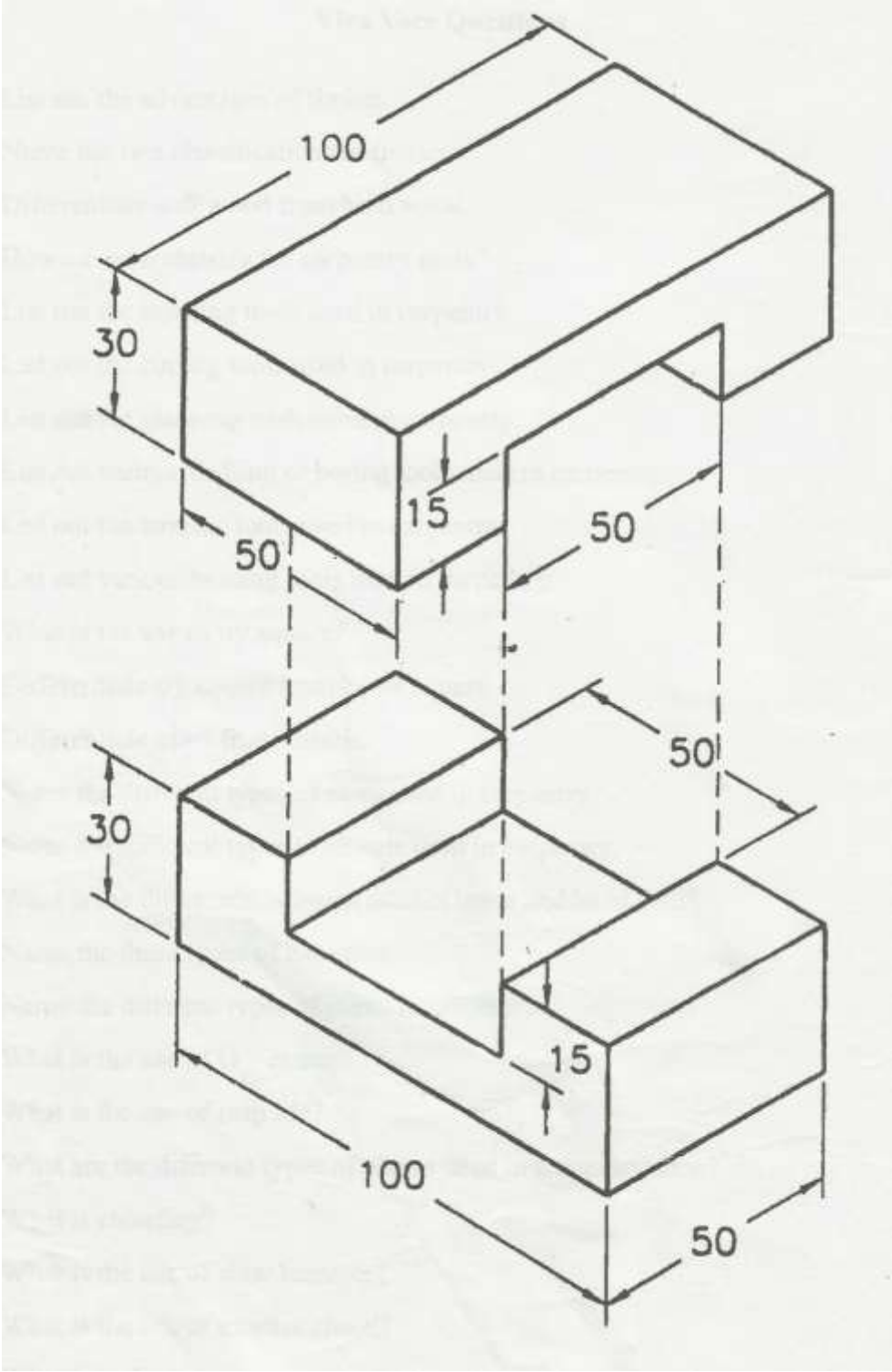

All dimensions in ‘mm’

Ex.No: **CROSS LAP JOINT** Date

Aim

To make a Cross lap joint from the given workpiece.

Material Required

Soft wood of size 300x50x50 mm.

Tools Required

1. Jackplane
2. Bench vice
3. Try square
4. Marking gauge
5. Steel rule
6. Tenon saw
7. Rip saw
8. Firmer chisel
9. Mallet

Procedure

1. The given workpiece is firmly clamped in the Bench vice and any two adjacent surfaces are planed to get right angles using the jack plane.
2. Using the try square, the right angles of planed faces are checked.
3. Now the other two surfaces are planed to get smooth surface.
4. The workpiece is cut into two pieces by using the rip saw.
5. Mark the dimensions for the Cross lap joint on the two pieces using the steel rule and marking gauge.
6. Remove the unwanted portions as per the drawing and assemble to check proper fitting.

Result

Thus the desired Cross lap joint is obtained.

DOVETAIL HALVING JOINT

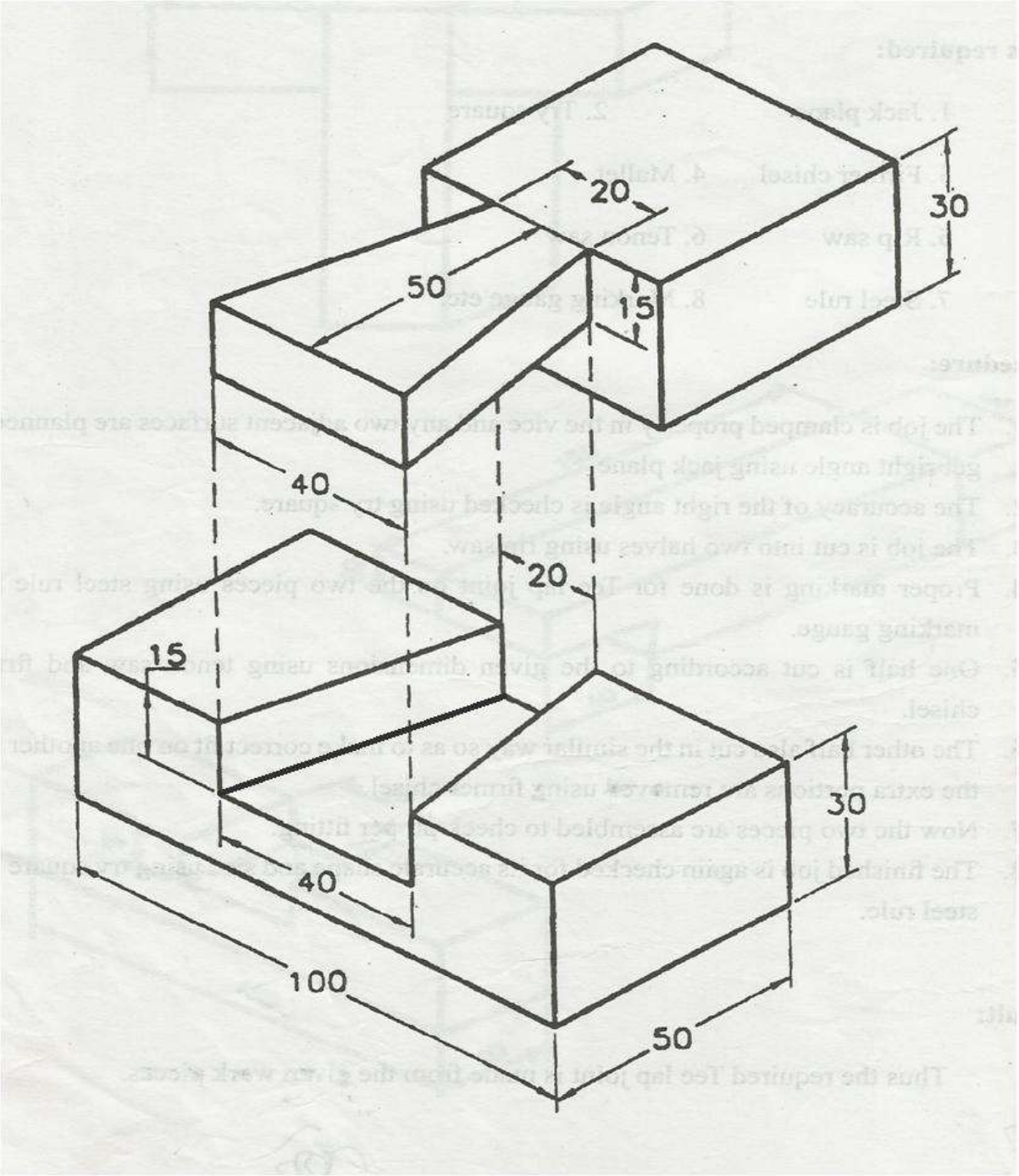

All dimensions in ‘mm’

Ex.No: **DOVETAIL HALVING JOINT** Date

Aim

To make a dovetail halving joint from the given workpiece.

Material Required

Soft wood of size 300x50x50 mm.

Tools Required

1. Jackplane
2. Bench vice
3. Try square
4. Mortise gauge
5. Mallet
6. Firmer chiesel

Procedure

1. The given workpiece is firmly clamped in the Bench vice and any two adjacent surfaces are planed to get right angles using the jack plane.
2. Using the try square, the right angles of planed faces are checked.
3. Now the other two surfaces are planed to get smooth surface.
4. The workpiece is cut into two pieces by using the rip saw.
5. Mark the dimensions for the dovetail joint on the two pieces using the steel rule and marking gauge.
6. Remove the unwanted portions as per the drawing and assemble to check proper fitting.

Result

Thus the desired dovetail halving joint is obtained.

PLUMBING

PLUMBING

INTRODUCTION

Plumbing deals with the laying of a pipeline. A craftsman may be perfectly proficient with the hammer, saw and other tools, but the faces difficulties with leaking pipes and overflowing toilets. Many people rush to a plumber on seeking a tripping pipe, but a person with a little knowledge of the sanitary system can control this problem easily, saving time and, one with help of few tools.

STUDY OF PLUMBING TOOLS

The tools used by a plumber can be classified as follows

1. Pipe wrench
2. Pipe vice
3. Pipe cutter
4. Hacksaw
5. Dies

1. Pipe wrench

A pipe wrench is used for holding and turning the pipes, rods and machine parts. Wrenches are classified as follows.1.Fixed wrenches 2. Adjustable wrenches.

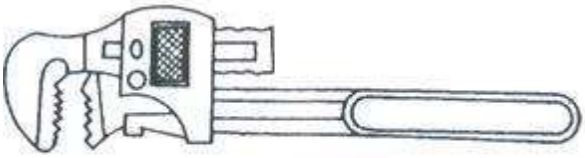

Pipe wrench.

2. Pipe vice

A pipe vice is fitted on the work bench. This has a set of jaws to grip the pipe and prevent it from turning while cutting, threading and fitting of bends, couplings etc. The yoke vice is commonly used in plumbing used in plumbing practice.

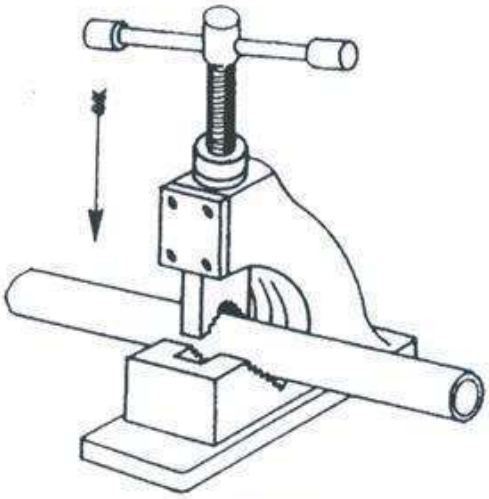

Pipe vice.

3. Pipe cutter

The pipe cutter mainly consists of three wheels which are hardened with sharp cutting edges along their periphery. Of these three wheels, one can be adjusted to any desired distance to accommodate different size of pipes. After adjusting the cutter on a pipe, it is around the pipe, so that the cutter wheels cut the pipe along a circle as shown in the figure.

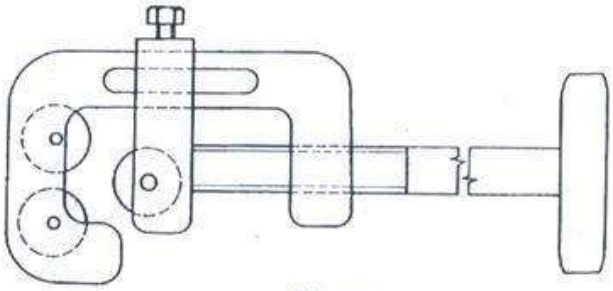

Pipe cutter.

4. Hack saw

A hacksaw is used for cutting metal rods, bars, pipes, etc.

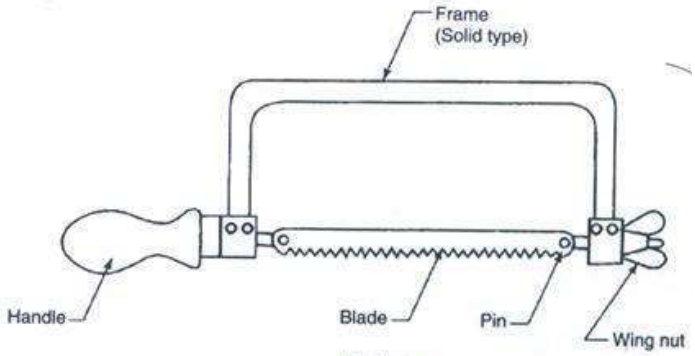

Hacksaw.

5. Dies

It is used for cutting external thread on pipes. Threads are produced in various shape and sizes which are used for fitting inside a handle.

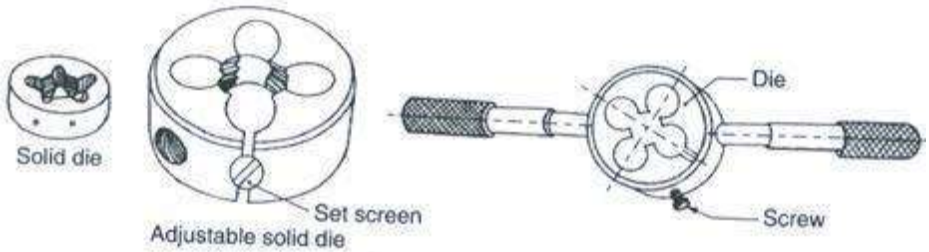

Threading dies and taps.

PIPE FITTINGS

Pipe fittings are made up of wrought iron. The size of pipe fitting is designated by the size of the pipe on which it fits. Some of the common pipe fittings are shown in figure

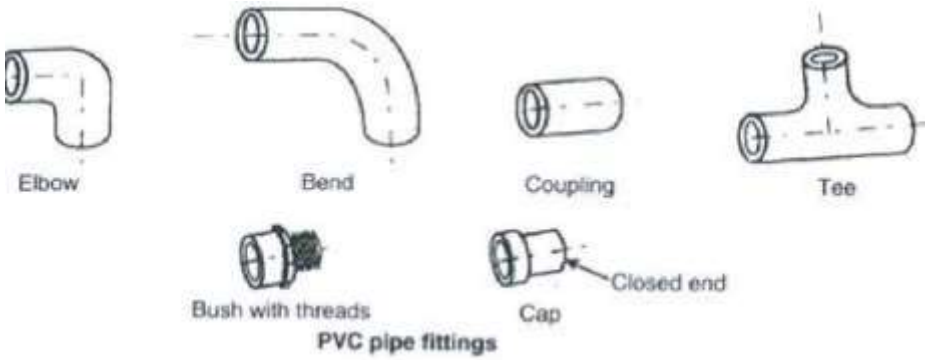

PVC pipe fittings

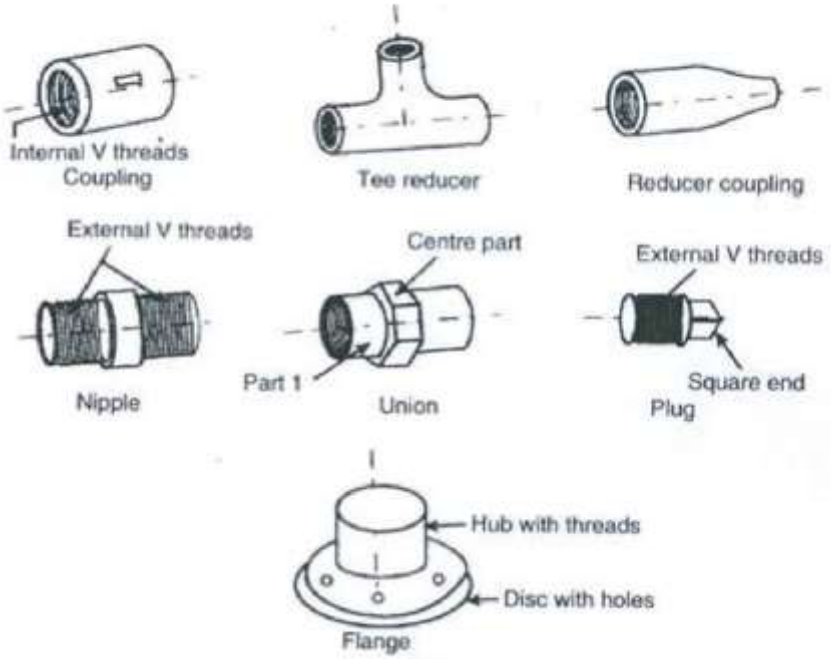

Pipe fittings.

1. Coupling

It is a short a cylindrical sleeve with internal threads throughout. A couplings is used for joining two pipes in a straight and bend where at least one pipe can be turned.

2. Union

A union is used for joining two pieces of pipes, where either can be turned. It consists of three parts, two parts joint can be screwed, in to two pipe ends, and the third on for tightening called centre part.

3. Nipple

A nipple is a short piece of pipe with external threads at both ends. It is used to make up the required length of a pipe line.

4. Elbow

An elbow is to make an angle between adjacent pipes.

5. Tee

A tee is a fitting that has one side outlet at a right angle to the run. It is used for a single outlet branch pipe.

6. Reducer

It is used to connect two different sized of pipes

7. Plug

It is used to screw on to a threaded opening, for closing it temporarily.

VALVES

Valves are used for regulating the flow of fluid through a pipe. The commonly used valves in plumbing's are

1. Gate valve
2. Globe valve
3. Plug valve
4. Check valve
5. Air relief valve.

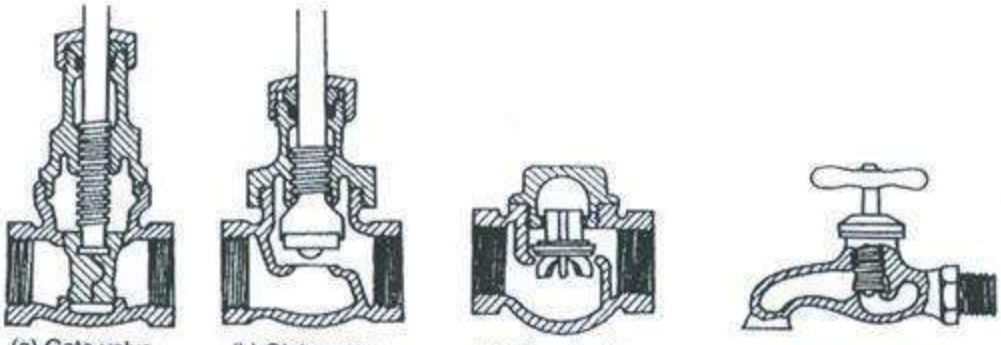

Valves.

TYPES OF PIPE JOINTS

1. Bell and spigot joints

A connection between two sections of pipe i.e. the straight spigot end of one section is inserted into the flared out end of the adjoining section. The joint is sealed by a sealing component.

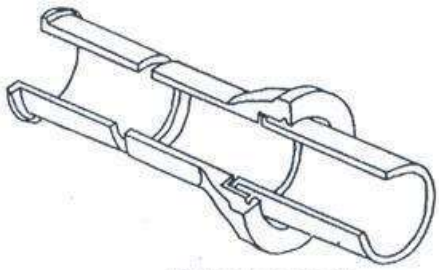

Bell and spigot joints.

2. Flanged joints

A flanged joint helps to connect and disconnect two pipes as per the need. A similar example is as shown in figure.

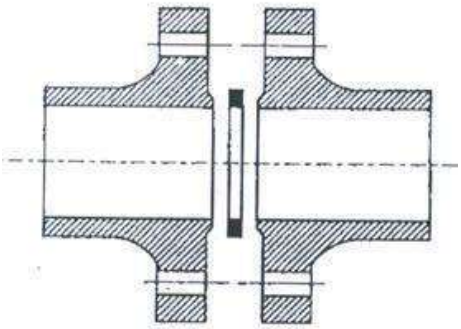

Flange joint.

3. Threaded joints

Threads are formed in a pipe, flange coupling to connect them with each other and these joints are called threaded joints.

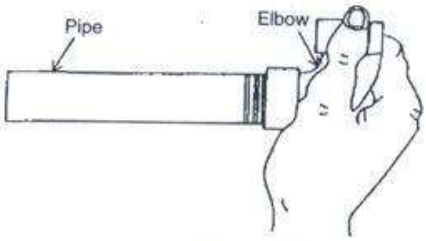

Threaded joint.

4. Flexible joints

The flexible joints are generally used to connect between a washbasin and an angle valve.

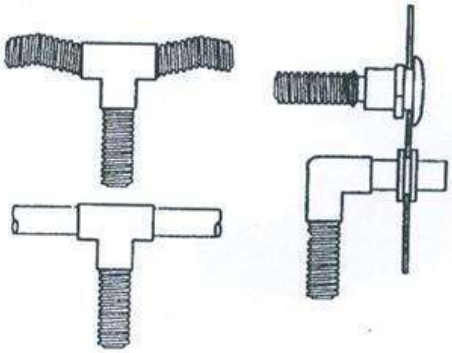

Flexible joints.

5. Expansion joints

Expansions joints are specially designed in pipeline where a small extension of pipe is required.

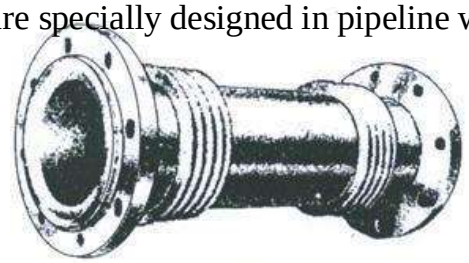

Expansion joints.

PIPE THREADING

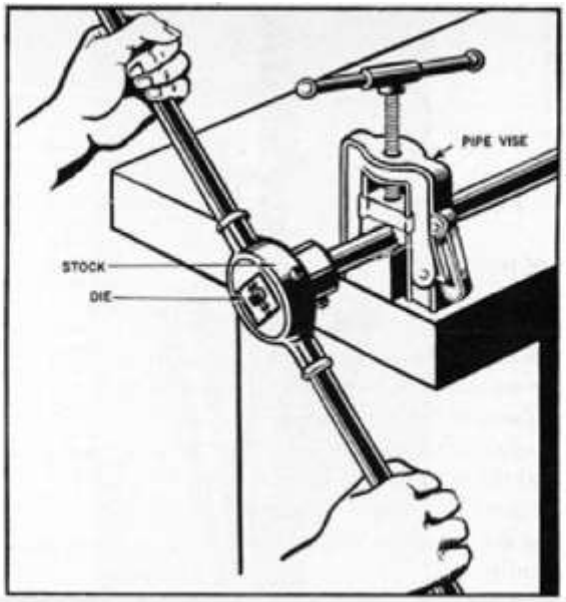

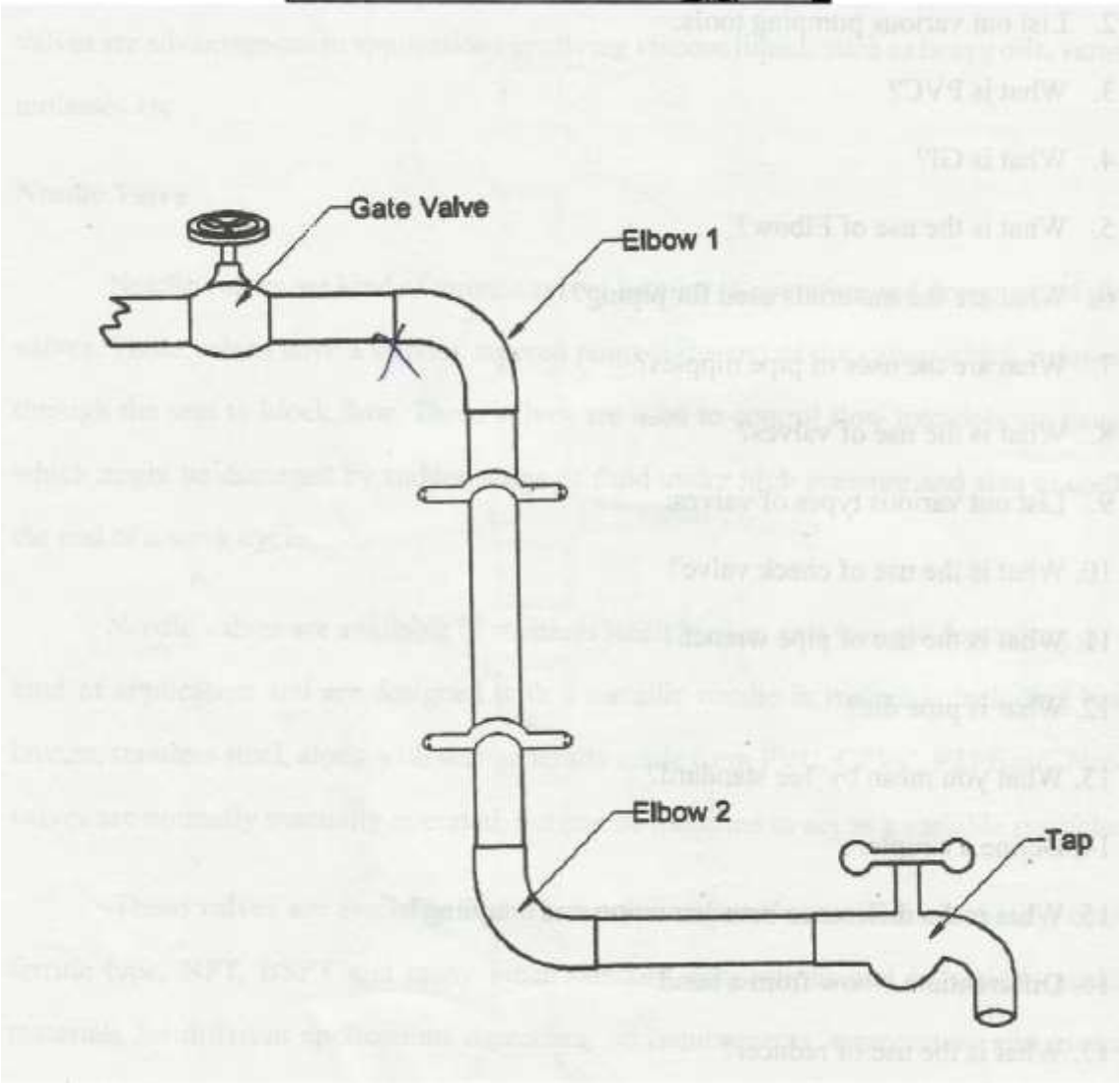

Ex.No: **PIPE THREADING** Date

Aim

To cut the threads at the end of the given PVC pipe by using a pipe die and to make the Plumbing.

Material Required

1. PVC pipe
2. Elbows
3. Tap
4. Valve
5. Clamps

Tools Required

1. Pipe vice
2. Die
3. Die stock
4. Measuring scale

Procedure

1. The required diameter pipes were picked and cut to the desired length
2. The cut pipe is securely clamped in the pipe vice
3. Proper size of die stock and die is selected. It is inserted and aligned into the stock
4. The die is positioned at one end of the pipe, Pressure is applied and at the same time die is slowly turned by turning stock handle
5. Once the threading is started, applying pressure is stopped and die is continued to turn till one thread projects through the die
6. In the same manner the ends of the pipes are threaded and checked with an elbow
7. Then the elbow and tap are fitted and clamped on the wall

Result

Thus the threads cut at the ends of PVC pipe to make plumbing

PIPE LINE TO WASH BASIN

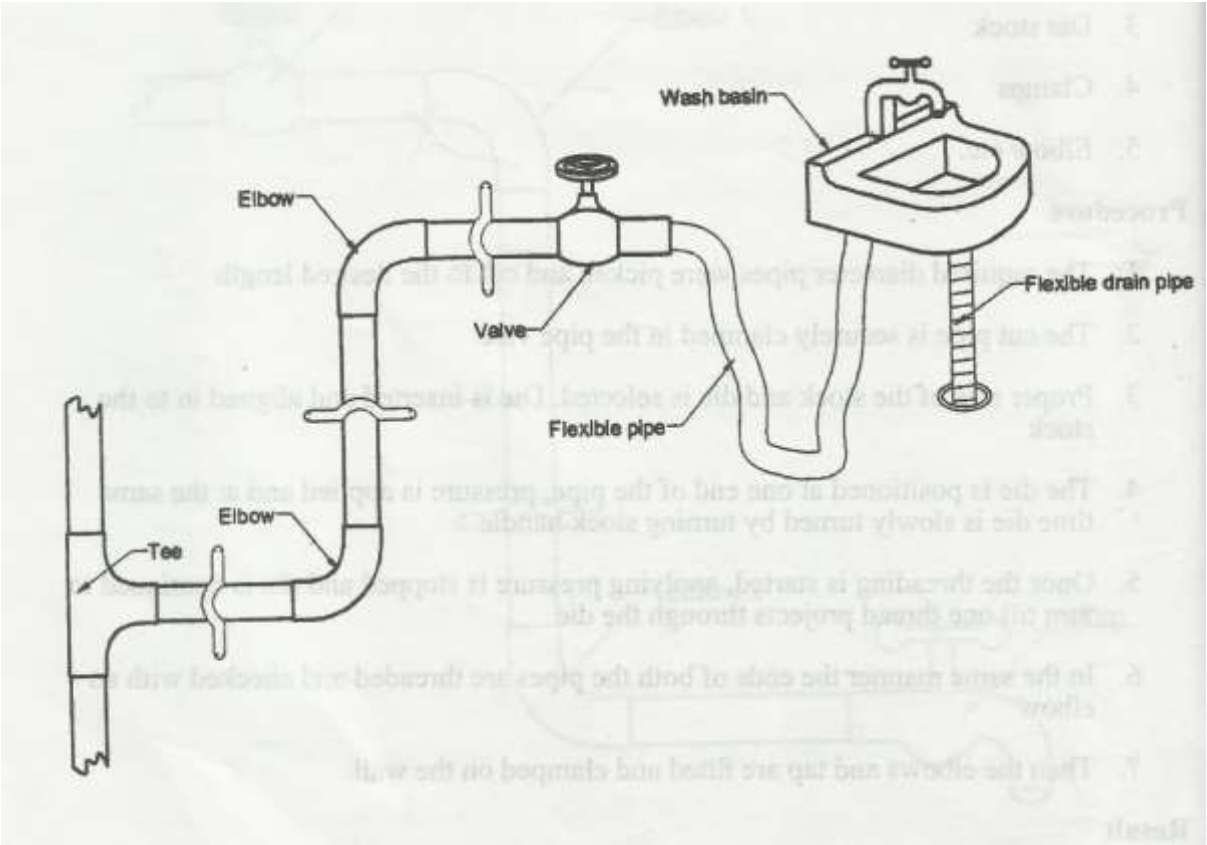

Ex.No: **PIPE LINE TO WASH BASIN** Date

Aim

To prepare a pipe line connection to the wash basin.

Material Required

1. PVC pipe
2. Elbows
3. Flexible pipe
4. Valve
5. Clamps
6. Wash basin with tap
7. Tee Joint

Tools Required

1. Pipe wrench
2. Hammer
3. Screw driver
4. Hack saw

Procedure

1. Mark location of the wash basin and fix it
2. Fix the wash basin tap in the required position
3. Make the tee and elbow connections in the main pipe line to connect it to the wash basin and taps
4. Fix the gate valve near the water tank
5. Connect all the pipe fittings as per the diagram
6. The water tank was filled with water and the gate valve was opened slowly to supply water into the pipe line
7. The tap were opened to check its function

Result

Thus the pipe line connection to the wash basin is made.
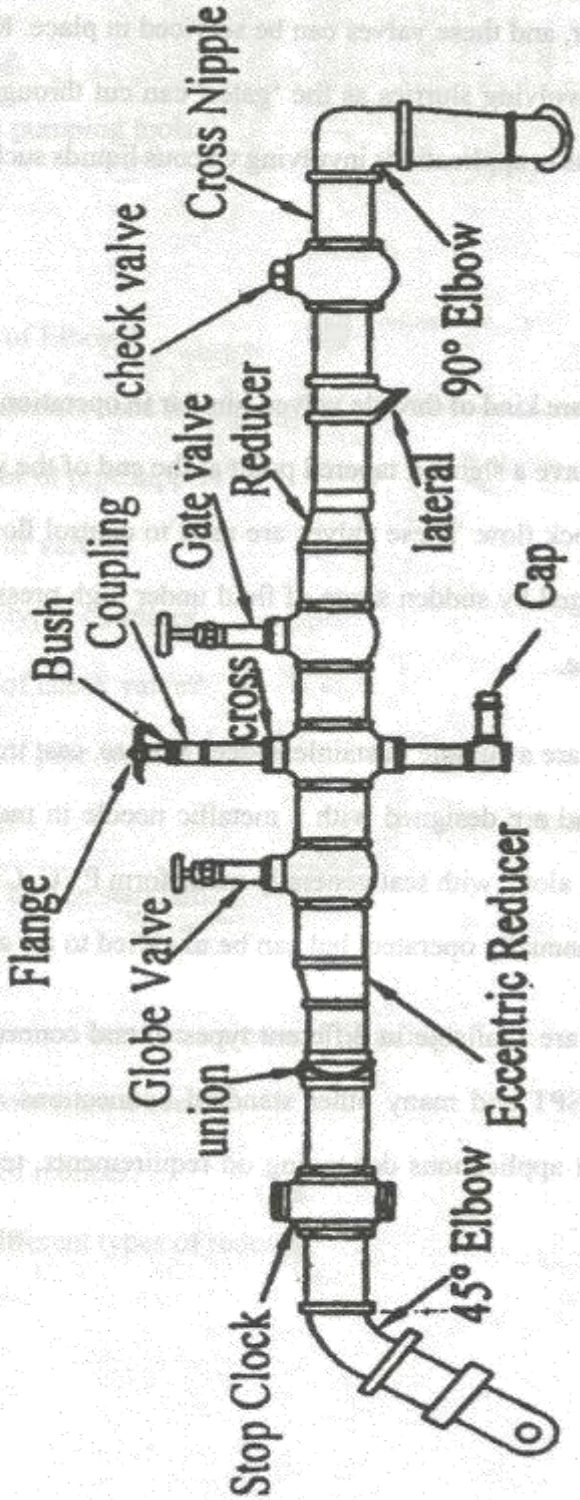
LAYOUT OF A SIMPLE PIPE CONNECTION