SRM VALLIAMMAI ENGINEERING COLLEGE

(An Autonomous Institution)

DEPARTMENT OF AGRICULTURAL ENGINEERING

AG3565 DESIGN AND DRAWING OF FARM AND IRRIGATION STRUCTURES

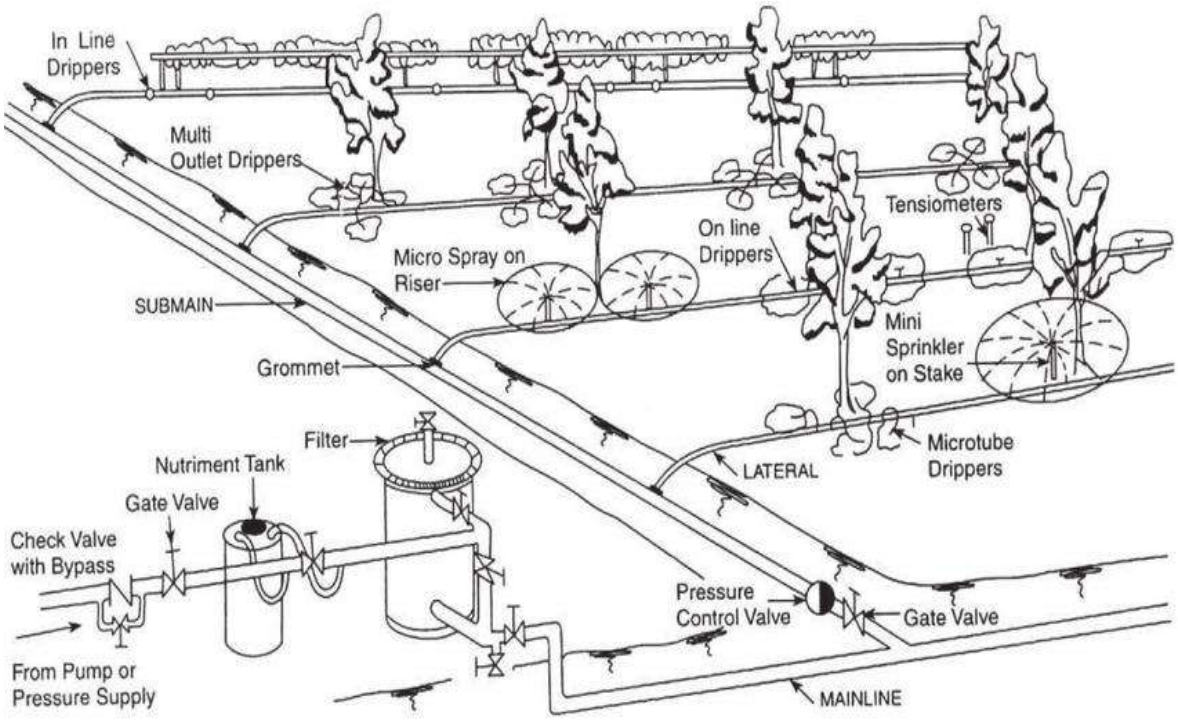

V SEMESTER

Prepared By

Dr. E. MAHESWARI\ Assistant Professor \ AGRI

Regulation –2023

Academic Year 2026 – 2027

LIST OF EXPERIMENTS

- Design of poultry house
- Design of Goat and Sheep house
- Design of farm fencing
- Design of Dairy Farm Unit
- Design of Surplus Weir
- Design of Tank Sluice with A Tower Head
- Design of Cross Drainage Work
- Design of Canal Regulation
- Design of Canal Drop

AG3565 DESIGN AND DRAWING OF FARM AND IRRIGATION STRUCTURES L T P C
0 0 3 1.5

OBJECTIVES:

- To conceive and design various farm structures related to agricultural engineering
- To conceive, design and draw the irrigation structures in detail showing the plan, elevation and sections
- To gain knowledge about Diversion Head Works.
- To differentiate various cross drainage structures.
- To have knowledge on canal regulators.

LIST OF EXPERIMENTS:

UNIT-I FARM STRUCTURES 15

Design of poultry house - sheep / goat house- farm fencing system- farm trusses ventilation system for dairy and poultry house.

UNIT-II TANK COMPONENT 15

Fundamentals of design - Tank bunds – Tank surplus weirs – Tank sluice with tower head - Drawings showing foundation details, plan and elevation.

Unit -III CROSS DRAINAGE WORKS 15

General design principles - Aqueducts – Syphon aqueducts – Super passage – Canal syphon – Drawing showing plan, elevation and foundation details.

Unit -IV CANAL REGULATION STRUCTURES 15

General Principles - Canal head works – Canal regulator – Canal escape – Drawing showing detailed plan, elevation and foundation details.

TOTAL:30 PERIODS

COURSE OUTCOMES:

At the end of the course, the student should be able:

1. Learned design and draw the plan, elevation and sections of tank components, farm structures, cross drainage works and canal regulation structures

2. Calculate the dimensions of irrigation structures.

3. Gain knowledge about importance of irrigation structures and their applications.

4. Understanding on the ground elevation available, with which can choose the appropriate structure and design its components.

5. To impart deep knowledge on the foundation design.

TEXTBOOKS:

1. José Pérez-AlonsoJosé, Pérez-Alonso, “Agricultural Structures and Mechanization”

2. Santosh Kumar Garg, Irrigation Engineering and Hydraulic Structures [Paperback] 38th, Khanna Publishers, 2023

3. Satya Narayana Murthy Challa, “Water Resources Engineering: Principles and Practice”, New Age International Publishers, New Delhi, 2020.

4. Agarwal, Irrigation Engineering and Hydraulic Structures, S.K. Kataria & Sons, 1st (2014), Reprint 2022.

5. Sharma, Irrigation Engineering And Hydraulic Structures, S Chand Publishing, 2017.

REFERENCE BOOKS:

1. Balasubramanya, Hydraulic Structures & Irrigation Design Drawing, Sapna Book House, 1st 2017.

2. Raghunath, Irrigation Engineering, Wiley India,2011.

3. Biswas, Drip and Sprinkler Irrigation, New India Publishing Agency (NIPA), 2nd Fully Revised and Enlarged Edition 2025.

4. Varshney, Gupta, And Gupta, Theory and Design of Irrigation Structures, NEM CHAND & BROS, 2009.

5. Singh, Banerjee, Dholawala, Irrigation Engineering, Charotar,2015.

AG3564	PO												PSO			
	1	2	3	4	5	6	7	8	9	10	11	12	1	2	3	4
CO1	-	1	2	1	-	-	-	-	-	-	1	1	1	-	1	-
CO2	-	3	2	1	-	-	-	-	-	-	1	-	-	-	2	2
CO3	2	-	1	2	-	-	-	-	-	-	-	-	1	-	2	2
CO4	2	1	-	2	-	-	-	-	-	-	1	2	1	-	-	2
CO5	-	1	2	1	-	-	-	-	-	-	1	1	1	-	1	-
Average	2	1.5	1.8	1.4	-	-	-	-	-	-	1.0	1.3	1.0	-	1.5	2.0

EX NO: 1 DESIGN OF POULTRY HOUSE

Design Specification for Poultry House

House Orientation (Direction)

The poultry house should be located in such a way that long axis is in east-west direction. This will prevent the direct sunshine over the birds.

Size

Each broiler requires one square foot of floor space while a layer requires two square feet of floor space under deep-litter system of rearing. So the size of the house depends on the number of birds to be reared.

Length

The length of the house can be of any extent. The number of birds reared and availability of the land determines the length of poultry house.

Width

The open sided poultry houses in tropical countries should have a width not more than 22 to 25 feet in order to allow ample ventilation and aeration at the mid-portion. Sheds wider than this will not provide adequate ventilation during the hot weather. If the width of the shed is more than 25 feet, ridge ventilation at the middle line of the roof top with proper overhang is a must. Hot air and obnoxious gases which are lighter than air move upward and escape through ridge ventilation. In environmentally controlled poultry houses, the width of the house may be even 40 feet or more since the ventilation is controlled with the help of exhaust fans.

Height

The height of the sides from foundation to the roof line should be 6 to 7 feet (eaves height) and at the centre 10 to 12 feet. In case of cage houses, the height is decided by the type of cage arrangements (3 tier or 4 tier).

Foundation

Good foundation is essential to prevent seepage of water into the poultry sheds. The foundation of the house should of concrete with 1 to 1.5 feet below the surface and 1 to 1.5 feet above the ground level.

Floor

The floor should be made of concrete with rat proof device and free from dampness. The floor of the house should be extended 1.5 feet outside the wall on all sides to prevent rat and snake problems.

Doors

The door must be open outside in case of deep-litter poultry houses. The size of door is preferably 6 x 2.5 feet. At the entry, a foot bath should be constructed to fill with a disinfectant.

Side walls

The side wall should be of 1-1.5 feet height, and generally at the level of bird's back height. This side wall protects the bird during rainy days or chill climate and also provides sufficient ventilation. In case of cage houses, no side wall is needed.

Roof

The roof of the poultry house may be thatched, tiled, asbestos or concrete one depending upon the cost involvement. Different types of roofs are Shed, Gable, half-monitor, full-monitor (Monitor), Flat concrete, Gambrel, Gothic etc. Gable type is mostly preferred in tropical countries like India.

Overhang

The overhang of the roof should not be less than 3.5 feet in order to prevent the entry of rain water into the shed.

Lighting

Light should be provided at 7-8 feet above the ground level and must be hanged from ceiling. If incandescent bulbs are used, the interval between two bulbs is 10 feet. In case of fluorescent lights (tube lights) the interval is 15 feet.

Design a Layer Poultry House for 1000 Chickens

Design

Application: Small scale layers chicken house

Chicken cage model: A-Type layer cage, 3 tiers, 120 birds/set

Chicken cage size: 2150mm×1870mm×1550mm

Number of chicken cages: 9 sets

Number of chickens: 120 birds/set ×9 sets/row ×1 row/house ＝1080 birds/house

Design layout: 9 sets/row, 1 row/house

Poultry house size (L×W×H): 30m×4.5m×3m

Poultry house beam height: >2820mm

Type	Dimension(mm)/set	Tier	Door/tier	Bird/door	Bird/set
A Type	2150×1870×1550	3	10	4	120
Area/bird(cm²): 441					

Since each set of three tiers layer cages can breed **120 chickens**, **9 sets** can be prepared to meet the breeding needs of **1080 layers.**

Length of A-Type

length of each set of A-type layer cages = 2150mm

Total Length = length of each set of A-type layer cages + Reserved Space

= 2150×9=19350mm (19.35m)

Spacing added before and after is 2-3m.

Width of A-type

width of a single set of A-type layer cages = 1870mm

Total Width = width of a single set of A-type layer cages + width of the legs of the cage

= 2400mm

Height of A-Type

Height of the three tiers cage net of this A-type layer cage = 2020mm

Total Height = Height of the three tiers cage net of this A-type layer cage + Headspace that needs to be reserved

= 2020mm + 800mm

= 2820mm

The design size of the poultry house = **30m×4.5m×3m**
The maximum number of Chicken rise = 1080 birds.

The 1,000-layer poultry house plan mainly plans the layout of the poultry house and the preparation of chicken-raising equipment with a scale of about 1,000 chickens. Since the number of chickens is small, we have prepared the three tiers A-type layer cage for the plan for economical and practical purposes. Since each set of three tiers layer cages can breed 120 chickens, 9 sets can be prepared to meet the breeding needs of 1080 layers.

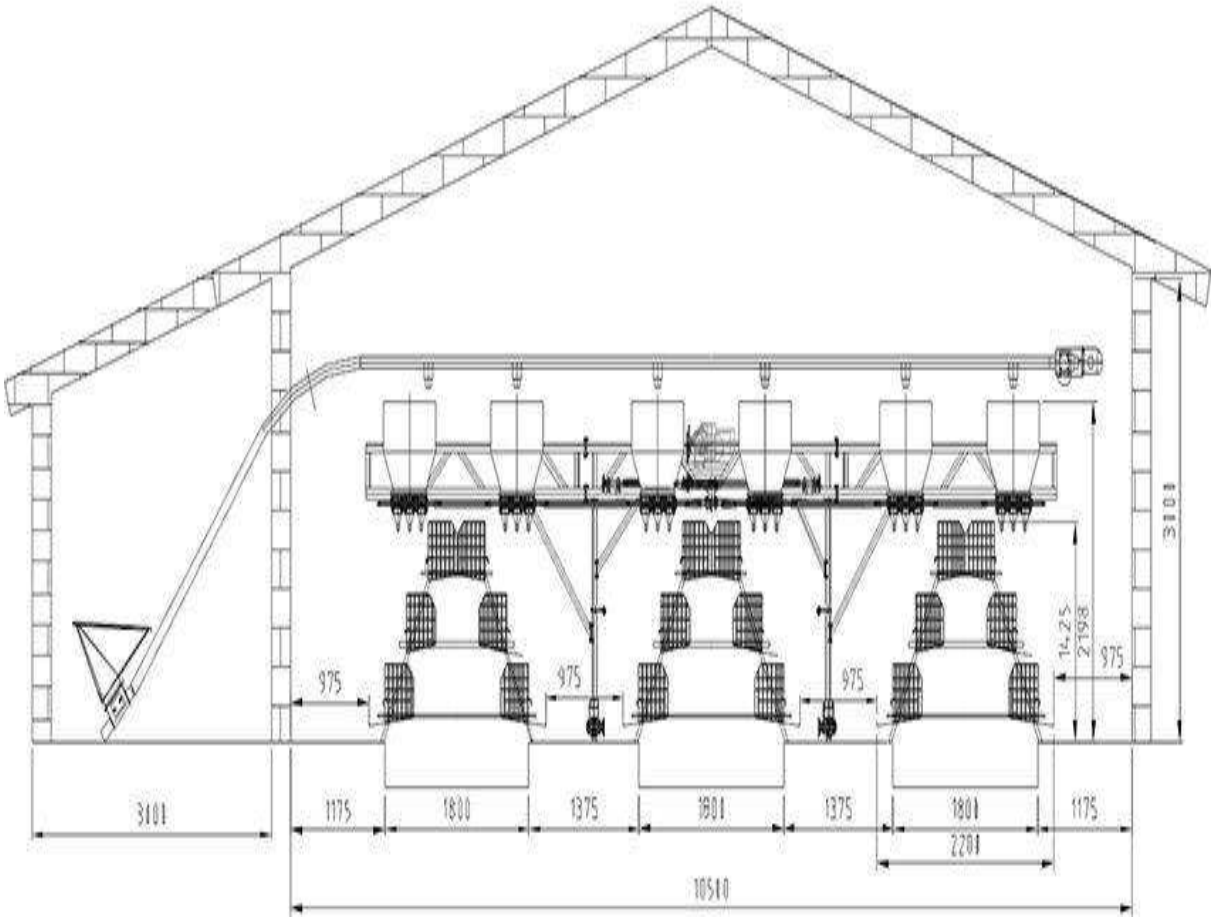

- Cross ventilation (fans on one side of the house and inlets on the other side –works best in houses of less than 10 m wide)
- Sidewall ventilation: fans and inlets on same sidewalls
- Attic inlet ventilation: fans are distributed at the side-walls, inlets are in the roof

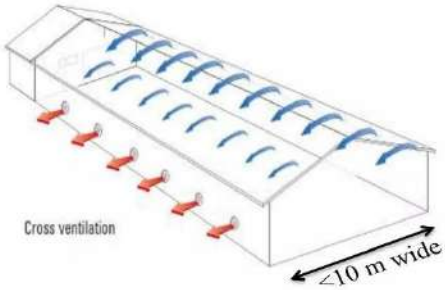

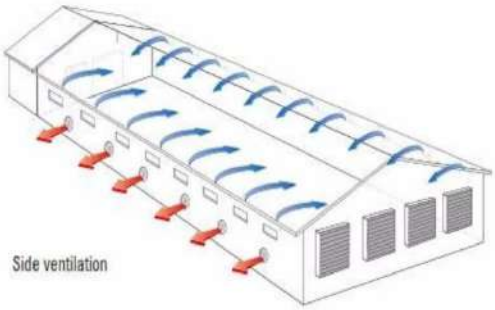

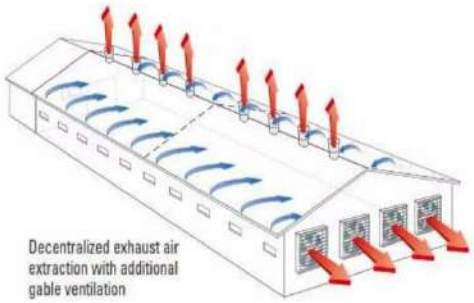

VIVA VOCE QUESTION

1.What is included in Poultry farming?

Poultry is the class of domesticated fowl used for food or for their eggs. They typically include chicken and ducks, and sometimes turkey and geese. The word poultry is often used to refer to the meat of only these birds but in a more general sense, it may refer to the meat of other birds too.

2. What is a domestic fowl?

Domestic fowl constitutes a major poultry bird as 90% of poultry farming is connected with rearing, breeding and management of Domestic fowl which is used for obtaining meat and eggs.

3. What is the characteristic feature of a broiler?

Broilers are also called as Table birds. They are quick growing birds which are generally males but can also be a female. They are grown for 6-7 weeks when they attain a weight of 1.5-2 kg. Broilers are sold in fresh or frozen form after removal of feathers, head and feet.

4. What is the Indian breed of Poultry?

Busra is an Indian breed of Poultry. Other examples include Ghagus, Aseel, Chittagong, Cochin, Brahma, Kadaknath. White Leghorn, Australorp and Plymouth Rock are Mediterranean, British and American breeds respectively.

5.What is the component of poultry farm management?

Selection of disease-free and suitable breeds, proper and safe farm conditions, proper food and water, proper hygiene and health care are important components of poultry farm management.

6. What is the exotic breed reared in India?

Presently, in India, about 80% of the chicken are reared from three exotic breeds-Rhode Island Red, White leghorn (for eggs) and Plymouth Rock (for broilers). Crosses have been made between exotic and indigenous breeds in order to increase immunity against diseases.

7. Why females of dual-purpose breeds are raised as broilers while the males are raised as layers?

Dual purpose breeds are the breeds which are raised both as broilers as well as layers. Usually, males of dual-purpose breeds are raised as broilers while the females are raised as layers.

EX NO: 2 DESIGN OF GOAT AND SHEEP HOUSE

Design Specification for Goat and Sheep house

Floor

- The flooring may be either of moorum or of strong wooden battens and, where the rainfall is quite heavy; the latter type of flooring may be preferred.
- In the case of wooden-batten flooring, the width of each plank shall vary from 7.5 to 10.0 cm and the thickness between 2.5 cm and 4.0 cm.
- The sides of the planks shall be well rounded and the clearance between two planks shall range between 1.0 cm and 1.5 cm to facilitate the disposal of dung and urine.
- The wooden-batten flooring shall be constructed at a height of at least one metre above the ground level.
- In this case, a suitable ramp or steps of wooden planks shall be provided.
- In the case of moorum flooring, a plinth wall between 15 cm and 30 cm in height shall be provided.
- For the shearing and store room and shepherd's house, the flooring may be of moorum or brick in cement mortar, and the floor shall be levelled properly.

Roof

- The roof may be made gabled.
- The roofing material may be either plain or corrugated galvanized steel sheets or asbestos cement sheets and where the rainfall is not heavy, it may be of thatch.

Gate

- Each shed may be provided with one or more gates either on the long or broad sides of the sheds depending upon the dimensions of the shed.
- The dimensions of each gate may be 0.8 m broad and one metre high. The gate leaf and frame may be made of wooden battens. It shall fit the entrance closely.

Manger

- The manger may be either of cement concrete or of wood with two compartments for providing feed and hay.

- A separate hay rack may also be provided by fixing at level or slightly below the heads of the animals.
- With the help of clamps, the manger may be raised within the height ranging between 450 and 600 mm from the ground.
- The water trough may be of cement concrete or galvanized steel pails or buckets and may be fixed or hung from a hook fixed to the walls.
- The manger may also be of portable type. The number of mangers and water troughs in each shed may vary according to the number of animals.

Dipping Tank

- To protect the animals from infection a dipping tank may be made either of galvanized steel sheets or constructed of stone or brick in cement mortar, whichever is likely to prove economical, according to local conditions.
- If a galvanized steel tank is used, it shall be well bedded down and the soil rammed tight against it to prevent the sides of the bath from bulging when it is filled.
- If the base of the soil is unstable, the tank may be bedded in cement concrete.
- The dipping tank may be at one side of the yard.

Footbath

- A footbath made of galvanized steel sheets or brick in cement mortar shall be provided at the entrance to the yard to protect the animals from foot-rot disease.
- These baths may be embedded in the soil suitably.

Age of goats	**Covered area**	**Open paddock**
0 to 3 Months	0.2-0.25	0.4-0.5
3 to 6 Months	0.5-0.75	1.0-1.5
6 to 12 Months	0.75-1.0	1.5-2.0
Adult Goats	1.5	3.0
Pregnant and lactating goats	1.5-2.0	3.0-4.0
Bucks	1.5-2.0	3.0-4.0

Housing for 100 females + 5 Males with followers' kids

By taking into assumptions of the following points and space requirements of different categories of goats, the housing requirement for goat house is calculated.

- For starting 100 female goat unit, at least 5 adult males required for breeding purpose. (20 females: 1 male). However, due to unforeseen reasons like the poor reproductive performance of male, it is better to rear 7 adult males.
- In the organized farm, usually 85% of females give birth to young ones every year, so out of 100 female adult goats, we expect 85 females giving birth every year.
- Suppose, 50 % of female goats giving twins birth out of 85 females that we get 84 kids. And therefore 50 % of female goats giving single birth out of 85 females that we get 43 kids.

The total kid's strength is 84+43 = 127. Suppose 63 will be male and 64 will be female kids

- The replacement rate of adult animals is expected at 10 percent in the organized farm.
- The kids are reared up to 9 to 12 months of age sold to farmers for breeding or for meat purposes.
- the goat housing requirement increases according to their age and size.

S.NO	**Categories of animals**	**Space per Animal**	**Total space Required**
1.	Adult females (100 nos)	1.5 sq m	150 sq m
2.	Adult Males (5 nos)	2.0 sq m	10 sq m
3.	Young Female (64 nos)	0.75 sq m	48 sq m
4.	Young Males (63 nos)	0.75 sq m	47 sq m
5.	Office + Store room	40 sq.m	40 sq m
	Total space required		**295 sq m**

This is only for shed or housing area. The open paddock area for goats depends on how much land you have. generally, the open Paddock area should be double of your shed area.

The open paddock area is too much important for the exercise and refreshment of the goats.

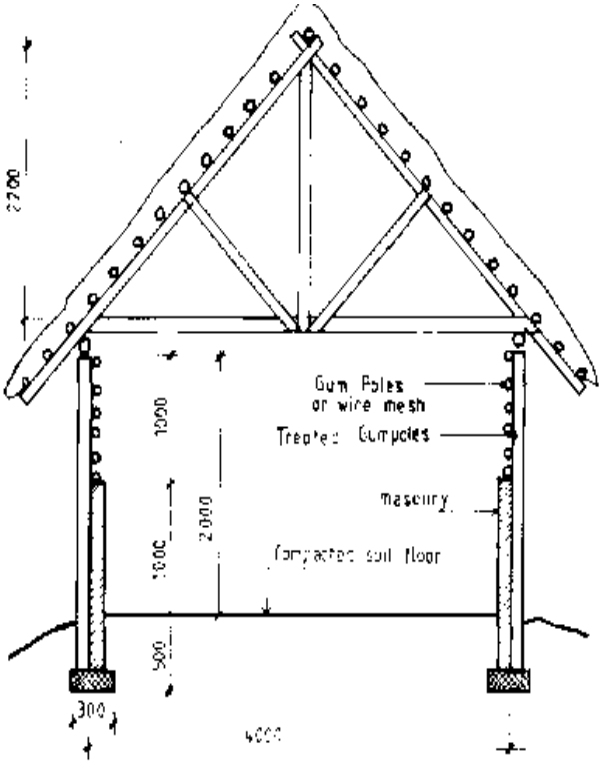
2700
1000
2000
1000
900
300
4000
Gum Poles
or wire mesh
masonry
Compacted soil floor

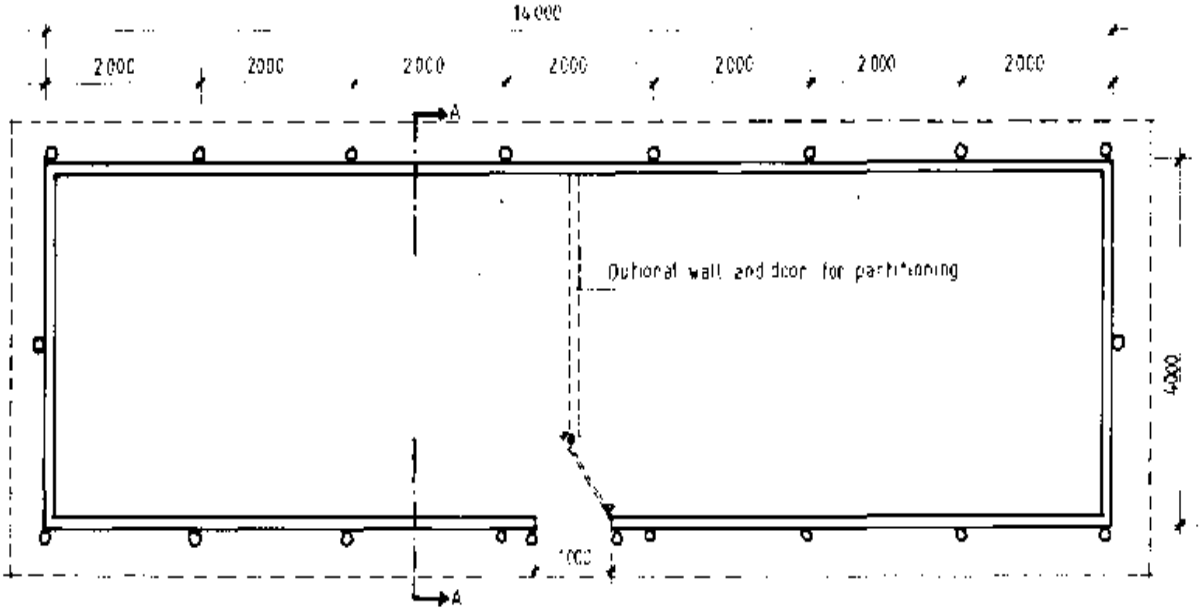
14000
2000
2000
2000
2000
2000
2000
2000
A
A
Optional wall and door for partitioning
4000
1000

VIVA VOCE QUESTION

1.How long does a sheep or goat live?

Assuming good health (and good nutrition, and good teeth, and good luck), a sheep or goat female should be productive until she is about 10 years old. If teeth wear quickly, though, older animals will not be able to graze well enough to maintain condition, and then they are susceptible to illness and will not be able to raise kids or lambs very well.

Prime years for a sheep or goat female are typically ages 2 to 7. Rams and bucks sometimes have disposition problems as they age and therefore may not be retained as breeders for their full life. Also, to avoid inbreeding, rams may need to be used for only two to three years on a given farm.

2. Can You Have Just One Goat?

Goats are social animals, and they have been designed to function in a group. Just watch them sleep in a herd. They lay in a huddle with one's head resting atop a friend's flank (can't do that when you're alone). A goat left on its own will feel lost, constantly call out plaintively, and may develop nervous behaviors. Even if you want a goat as a pet, it will still need a herd when you're not spending time with it. If you have no other large livestock, my recommendation is to always have at least two goats.

3. How Many Goats Can You House per Acre?

A standard answer for this, according to Farming Base, is up to 8 goats per acre. That number can be incredibly unhelpful, however, because it says nothing about how you're managing your goats or the quality of the pasture. A herd of goats left on pasture will quickly eat through their favorite plants, resulting in either an unbalanced pasture that's only growing plants they don't want to eat, or an overused pasture that can't recover from their feeding. If you rotate pastures, picket the goats in different areas every week, or bring them loads of trimmed brush from the forest you're rehabilitating, you'll be able to manage goats on a huge range of land sizes and orientation.

4. How Do goats Fit Into a Permaculture Landscape?

This is a tough question to answer. From my perspective, goats are one of the worst animals to keep in a permaculture system. As browsers, it is in their nature to eat shrubs and trees, and not graze solely on grass. And as escape-artists, they are basically a bad day waiting to happen. If the goats get free, they could undo years' worth of growth on your tree crops.

5. Why Goat Farming?

Goat farming is very profitable, and you can take it as your main income source. Unemployed educated young people can take goat farming as an employment source. Even the women and children of a family can take goat farming as an additional income source. Commercial goat farming business can be a great source of income.

6. How Much Feeds Do Goats Require Daily

Exact amount of feeds depends on the size and age of the goats. But on an average, a goat will require 3-4 percent of feed of their total body weight.

EX NO: 3 DESIGN OF FARM FENCING

Upright posts

Upright posts made of wood are cheaper but does not last long. They become uneconomical due to painting of them year after a year and renewing owing to white ants, rot and deterioration. Next in order of present-day popularity for fence post is iron, which also has to be continuously painted and guarded against rust, which is the ever-present enemy of iron material. The concrete posts are better than both wooden and iron ones and durable though the cost is slightly more than other two.

The concrete posts can be manufactured on the farm itself. They are made as square posts, square tapered posts or as posts with triangular coping. Concrete posts are easy to construct. The posts are usually made for 1.8 m to 2.1 m (6 ft. to 7 ft.) length and the size of the posts being 12.5 cm square (5 inches) square or 12.5 cm square (5 inches square) bottom and 7.5 cm square (3 inches square) at top. These posts are made on the form by using rectangular wooden moulds without top or bottom. The moulds are placed over a platform and reinforcement bars (steel rods) are placed in position leaving a cover of 1.9 cm to 2.5 cm (3/4 inch to 1 inch) alround by propping. The size of rods adopted for reinforcements may be of 6 mm or 10 mm (1/4 inche or 3/8 inch). The smaller diameter rods are adopted for ordinary posts, but when heavy usage is expected and a bigger post is therefore necessary, larger diameter may be used. As a fence post has usually to resist lateral or bending pressure and it is difficult to determine from which direction the pressure acts, it is safe to reinforce all the four sides.

The rods are laid lengthwise, the ends built up at right angles to exclude any change of the concrete pulling away from the steel. The rod should be kept apart by 3 mm (1/8") wire wound round in the form of spirals at 30 cm (12 inches) apcing.

Casting posts

The concrete is prepared by mixing broken stones 1.9 cm (3/4 inches gauge with sand and cement in the proportion of 4:2:1 or 3: 1.5:1 by volume. This is mixed well by adding clean water at the rate of not more than (5 gallons) pr bag of cement. The mixture after the water is added should be of medium wetness and thoroughly plastic, but not too slopy. Before concrete is placed in the mould ; the latter should be lightly greased or rubbed with oil or soft

soap. Instead, they can be thoroughly wetted by pouring water. The concrete should be placed within the mould as soon as mixing is completed as the concrete sets within 30 minutes. The mixture filled in thin layer should be tamped well to ensure complete filling of the space without any voids. The top surface should be trowelled to level the surf ace and left to settle.

If holes are to be provided for inserting the wires or to be tied, rods should be inserted through the holes provided in the side of the boxes before the concrete is placed. These rods should be withdrawn after the concrete has set sufficiently to retain its shape which varies from 4 to 6 hours.

The castings should be left in the mould for 24 hours after which time the mould can be dismantled are reused. Then the post should be cured on the platform itself for 4 days by covering it wetted sand. It is then lifted from the platform and put in a water tub or pond for curing. If no pond is available it can be placed over a bed of wet sand and water sprinkled on it. The curing should be done for two or three weeks. The posts should be used preferably after 3 months period after casting but in no case it should be used before 30 days.

Spacing of posts

The life of fence and maintenance cost is dependant upon the size of spacing of fencing posts. usually a spacing of 2.4 m to 3.0m (8 ft. to 10 ft.) is better for wire fences. The corner posts and straining posts should be heavier than the line posts and must be supported by struts. For this a mortise is made near the top of the post. The struts are made to 7.5 cm x 7.5 cm(3” x 2”) and reinforced with four 6mm (1/4”) diameter rods. The struts are placed into the ground and covered by concrete.

Erecting fence posts and wire

The posts should be set in the ground for 52.5 cm (1.75 ft.) or 60 cm (2 ft.) depth and should be concreted with a mix of 1:2.5:5. The wires are fastened to the posts and stretched well. The different methods of fastening the wires to the posts are given in fig.

The selection of wires depends on the purpose for which it is used. Barbed wire is effective for fencing the boundaries to prevent animal trespassing. But it is not suitable for poultry yards. Plain wires are best suited for cattle yard with or without barbed wire. Wire mesh is

suitable for poultry yards. In fencing with barbed wire, plain wire or wire mesh, the arrangement of horizontal wires at the bottom should be closer than at the top.

Farm gates

Gate and position should be selected so that unnecessary travel distance should be reduced. The gate way should be wide enough to give access to easy traffic. The gates provided should be strong and durable. For farm gates separate gate pillars of heavier sections should be provided to bear the weight of gates. The gates may be wooden, or iron with necessary locking arrangements. Some of the simple type of gates that can be made in the farm itself is given in figure.

Section	Fence Type	Height	Notes
Perimeter	Electric or barbed	4–5 ft	High-tensile for durability
Livestock	Woven wire	4–5 ft	Secure for cattle/goats
Chicken Coop	Poultry mesh	6 ft+	Bury mesh 1 ft to deter diggers
Garden	Deer-proof mesh (optional)	6–8 ft	Protects crops from wildlife
Gates	Steel tube gates	10–12 ft	Large enough for vehicle entry

Design Problem: Farm Fencing for Cattle and Goat Farm

A farmer plans to construct a **fencing system around a rectangular livestock farm measuring 100 m × 50 m** for rearing cattle and goats. The proposed fencing consists of:

- **RCC fence posts** spaced at **3 m intervals**
- **Welded wire mesh** of **1.8 m height**
- **One strand of barbed wire** provided at the top of the fence
- A **steel entrance gate** of **4–5 m width**
- Corner posts anchored with concrete foundations

Calculate the following:

1. Determine the **total perimeter** of the farm.
2. Calculate the **number of RCC fence posts required**.

3. Estimate the **total length of welded wire mesh required**.
4. Calculate the **total area of welded wire mesh required**.
5. Determine the **length of top barbed wire required**.
6. Draw a neat **plan, elevation, and sectional view** of the proposed fencing system.
7. Explain why RCC posts, welded wire mesh, and barbed wire are suitable for mixed cattle and goat farming.

Detailed Design of Farm Fencing for Cattle and Goat Farm

Problem Statement

Design a fencing system for a rectangular cattle and goat farm measuring **100 m × 50 m** using:

- RCC fence posts
- Welded wire mesh (1.8 m height)
- Top barbed wire
- Steel entrance gate (5 m width)
- Post spacing = 3 m

1. Design Data

Parameter	Value
Farm Length (L)	100 m
Farm Width (W)	50 m
Fence Height	1.8 m
Post Spacing	3 m
Gate Width	5 m
Fence Type	RCC Posts + Welded Wire Mesh + Barbed Wire

2. Calculation of Perimeter

The perimeter of a rectangular farm is:

$$P = 2(L + W)$$

Substituting values:

$$P = 2(100 + 50)$$
$$P = 300\,m$$

Total Perimeter = 300 m

3. Number of Fence Posts Required

Posts are provided at 3 m spacing.

$$N = \frac{P}{S} + 1$$

Where:

- N= Number of posts

- P= Perimeter (300 m)
- S= Post spacing (3 m)

$$N = \frac{300}{3} + 1$$
$$N = 100 + 1$$
$$N = 101$$

RCC Posts Required = 101 Nos.

4. Welded Wire Mesh Requirement
Fence height:

$$H = 1.8\,m$$

Perimeter:$P = 300\,m$
Area of mesh:

$$A = P \times H$$
$$A = 300 \times 1.8$$
$$A = 540\,m^2$$

Mesh Length Required = 300 m
Mesh Area Required = 540 m²

5. Barbed Wire Requirement
One strand of barbed wire is provided along the top.

$$L_b = P$$
$$L_b = 300\,m$$

Barbed Wire Required = 300 m
If two strands are provided:

$$L_b = 2 \times 300$$
$$L_b = 600\,m$$

6. RCC Post Design
Size of RCC Post
Commonly adopted size:

$$100\,mm \times 100\,mm$$

Height above ground: $1.8\,m$
Depth below ground:$0.6\,m$

Total length: $2.4\ m$

RCC Post Specification

Item	Dimension
Cross Section	100 × 100 mm
Height Above Ground	1.8 m
Embedded Depth	0.6 m
Total Length	2.4 m

7. Foundation Design

Ordinary Posts

Foundation pit: $300 \times 300 \times 600\ mm$

Corner Posts

Foundation pit: $450 \times 450 \times 750\ mm$

Concrete Grade: $M20$

Corner posts should be braced to withstand wire tension.

8. Gate Design

Main Entrance Gate

Width: $5\ m$

Height: $1.8\ m$

Material:

- Mild steel tubular frame
- Welded wire mesh infill

Two gate posts should be strengthened with concrete footing.

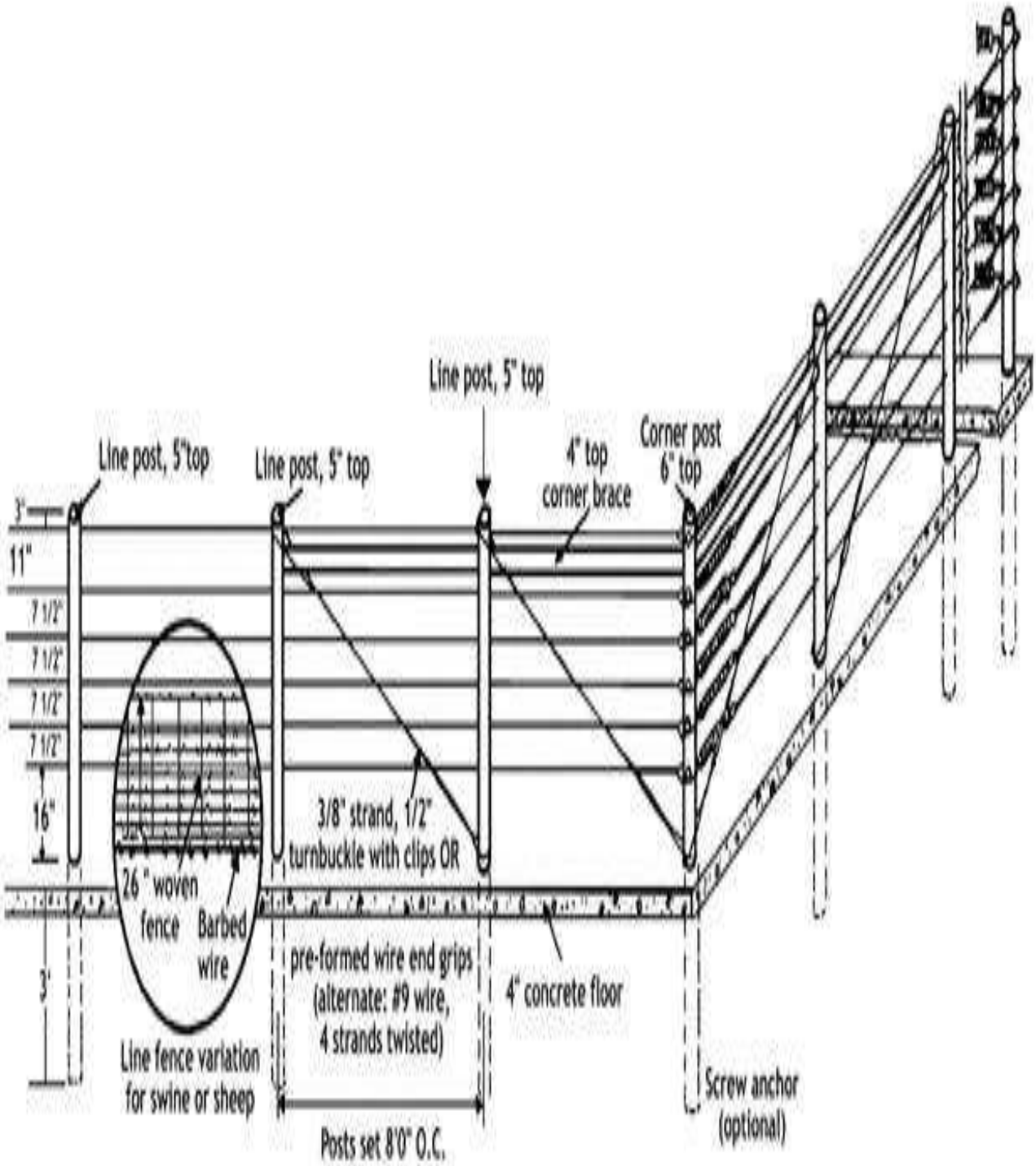
Line post, 5"top
Line post, 5" top
Line post, 5" top
4" top
corner brace
Corner post
6" top
3"
11"
7 1/2"
7 1/2"
7 1/2"
7 1/2"
16"
3'
3/8" strand, 1/2"
turnbuckle with clips OR
26 " woven
fence
Barbed
wire
pre-formed wire end grips
(alternate: #9 wire,
4 strands twisted)
4" concrete floor
Line fence variation
for swine or sheep
Screw anchor
(optional)
Posts set 8'0" O.C.

VIVA VOCE QUESTIONS

1. What is an agricultural wire fence?
   An agricultural wire fence is a type of wire fencing designed for use in agriculture. With an agricultural wire fence, livestock can freely graze and vegetation can grow without being impeded by livestock or predators. Agricultural fences are usually made of round metal posts, but other materials are available for people who want to cut costs.

2. What are some disadvantages of using wire fencing for agriculture?

   The main disadvantage of using wire fencing for agriculture is that it can be an eyesore, which defeats the purpose of keeping livestock in and predators out. Another disadvantage is that wire fencing is not very durable. A third disadvantage is the amount of upkeep required to maintain wire fences, especially if they run along a road.

3. What is the history behind wire fences?

   The history behind wire fences goes way back. Many historians argue that the use of cattle in agriculture started about 8,000 years ago in Europe, where herds of wild cattle were slowly domesticated over a long period of time. Around 10,000 years ago, livestock was being herded by people in China and India.
   In the United States during the late 1800s and early 1900s, some stockmen tried to keep livestock out of areas that had been recently plowed or planted with crops.

4. What are some advantages of using wire fencing for agriculture?

   The advantages of using wire fencing for agriculture is that it is a low-cost option for farmers on a budget and they don't take up much space. Wire fencing allows for livestock to graze outside instead of using up pastureland. It also prevents predators from entering the paddock.Wire fencing is preferred among farmers because it is a low-cost option and requires little space. Wire fences allow for livestock to graze in an area that would otherwise be used as pastureland. Wire fences can also keep predators out of the paddock, which protects the animals from being killed.

5. What is the best type of wire to use for agricultural fencing?
   The best type of wire to use for agricultural fencing is a high or low-tensile gi wire, rather than steel wire. This is because round metal posts are easier to bend or cut with steel wire. While a higher gauge will cost more initially, it will last longer in the long run than steel wire.

6. What are some disadvantages of barbed wire for agriculture
   The disadvantages of using barbed wire for agriculture include the fact that it tends to rust and degrade over time, as well as the damage it causes to the livestock. Other disadvantages of using gi wire fencing are that it doesn't prevent predators from entering the paddock.

7. What are some alternative options to using wire fencing for agriculture?
   An alternative option to using wire fencing is constructing a fence out of other materials, such as wood, vinyl, or metal. These fences may require less maintenance, but can be more expensive

EX NO: 4 DESIGN OF DAIRY FARM UNIT

Foundation is the basic structure to be put up in any construction work. It consists of two parts namely

- **1. Footing**
- **2. Foundation wall**

A. Footing

Footing is the broad base of the foundation wall designed to carry the load without settlement

Dimension	**Heavy**	**Light**
Width	**24''**	**12''**
Depth	**12''**	**8''**

B. Foundation wall

- The height of the foundation wall required for farm buildings depends on the soil condition of the site.
- Deeper foundation is necessary in loose soil and shallow in firm rocky soil.
- Generally, the height for light farm building will vary from 18" to 30". The thickness will vary from 9" to 12"

a. Material used

- Foundation footing can be made of cement concrete or brick and cement mortar.
- Concrete foundation is stronger and is called monolythick foundation.
- Brick foundation is provided with stepped up increase in width towards the base. It is not so strong as concrete.

b. Method of putting foundation

- Trenches of suitable size are put up to receive foundation. The base is hardened, made smooth and level.
- Then the footing and foundation wall is put up to ground level.
- The surface is smoothened and levelled again.
- At this place, a 4% layer of damp proof course of asphalt or other material is introduced to prevent absorption of moisture.

Walls

- Walls are the supporting structures built above the foundation to enclose the buildings.

- They may be constructed with materials like brick, stones or concrete with thickness of 9”, 12” and 6” respectively.
- Non-weight bearing walls of brick need not be thicker than 4 ½”.
- The height of the wall depends upon the type of animals to be housed under the building.
- Principles followed for finishing the walls in animal houses are as follows,
- The height up to 4 feet from floor should be finished smoother with hard cement plaster and made washable for reasons of hygiene.
- Corners should be filled and rounded to prevent accumulation of dust.
- The sharp edges and angles should be rounded to prevent accident.

Roof

- Roof is provided for the purpose of protecting animals from hot sun and rain. It also protects the internal structures.
- It should be of simple type. Cheap materials have to be used for animal buildings.
- One of the essential qualities required for roof material in tropical condition is to have high insulation value.
- In the absence of this, the roof has to be insulated.

Floor

- Floor is the important part of the building. Floor is the one, which is frequently used by animals for various purposes as resting, movement, feeding and milking etc.
- So the floor must have all the qualities, which are required to meet the purpose.
- It must be strong as durable to withstand the weight to hard roof of the building and movement of hard hoof of the animals. Durability is also required for economical point of view.
- Flooring must facilitate hygienic feeding and effective removal of waste product both liquid and solid.
- The floor should be laid on solid and compact foundation. It should have a gradient of 1/60 from manger to the rear dung channel.
- Non slippery quality is needed to avoid accident slipping especially in case of large animals.
- Grooves and roughened surface should be provided.

Floor, feeding manger and watering space requirements of dairy animals						
SR. NO	**TYPE OF ANIMAL**	**FLOOR SPACE) PER ANIMAL (M^2)**		**FEEDING (MANGER) SPACE PER ANIMAL (CM)**	**WATER TROUGH SPACE/ ANIMAL (CM)**	**MODE OF HOUSING**
		COVERED AREA	**OPEN AREA**			
1	Young calves (< 8 weeks)	1.0	2.0	40- 50	10-15	Individual or in groups of below 5
2	Older calves (> 8 wks)	2.0	4.0	40-50	10-15	Groups of below 15
3	Heifers	2.0	4.0-5.0	45-60	30-45	Groups of below 25
4	Adult cows	3.5	7.0	60-75	45-60	Groups of below 25
5	Adult Buffaloes	4.0	8.0	60-75	60-75	Groups of below 25-30
6	Down calvers	12.0	20-25	60-75	60-75	Individual
7	Bulls	12.0	120.0	60-75	60-75	Individual
8	Bullocks	3.5	7.0	60-75	60-75	Pairs

Design of Dairy form for 50 numbers

Number of Animals = 50 nos

Covered floor space per adult animal = 70 (Sq.ft)

Open space per adult animal = 100 (Sq.ft)

Manager length of animals in inches = 25

(a) Covered area = 70 sq feet/animal

(b) Un-covered area = 100 sq feet/animal

Therefore, total covered area = 70 x 50 = 3,500 sq feet

And un-covered area = 100 x 50 = 5,000 sq feet

Roads and offices @ 10% of total area

= (5,000 + 3,500)/100 X 10 = 850 sq ft.

Total land: 5,000 + 3,500 + 850 = 9,350 sq feet (Isq feet = .0929 m^2),43560.7 sq feet = 1 acre

Therefore 9350 sq feet = 0.2169 acres or say 0.22 acre
Therefore, 9350 x .0929 = 868.61 m^2 = 868.61×2.5 /10,000 = 0.2169 acres or say .22 acres.

LAYOUT OF BUILDINGS FOR A 50 DAIRY ANIMALS (25 COWS & 25 BUFFALOES) UNIT

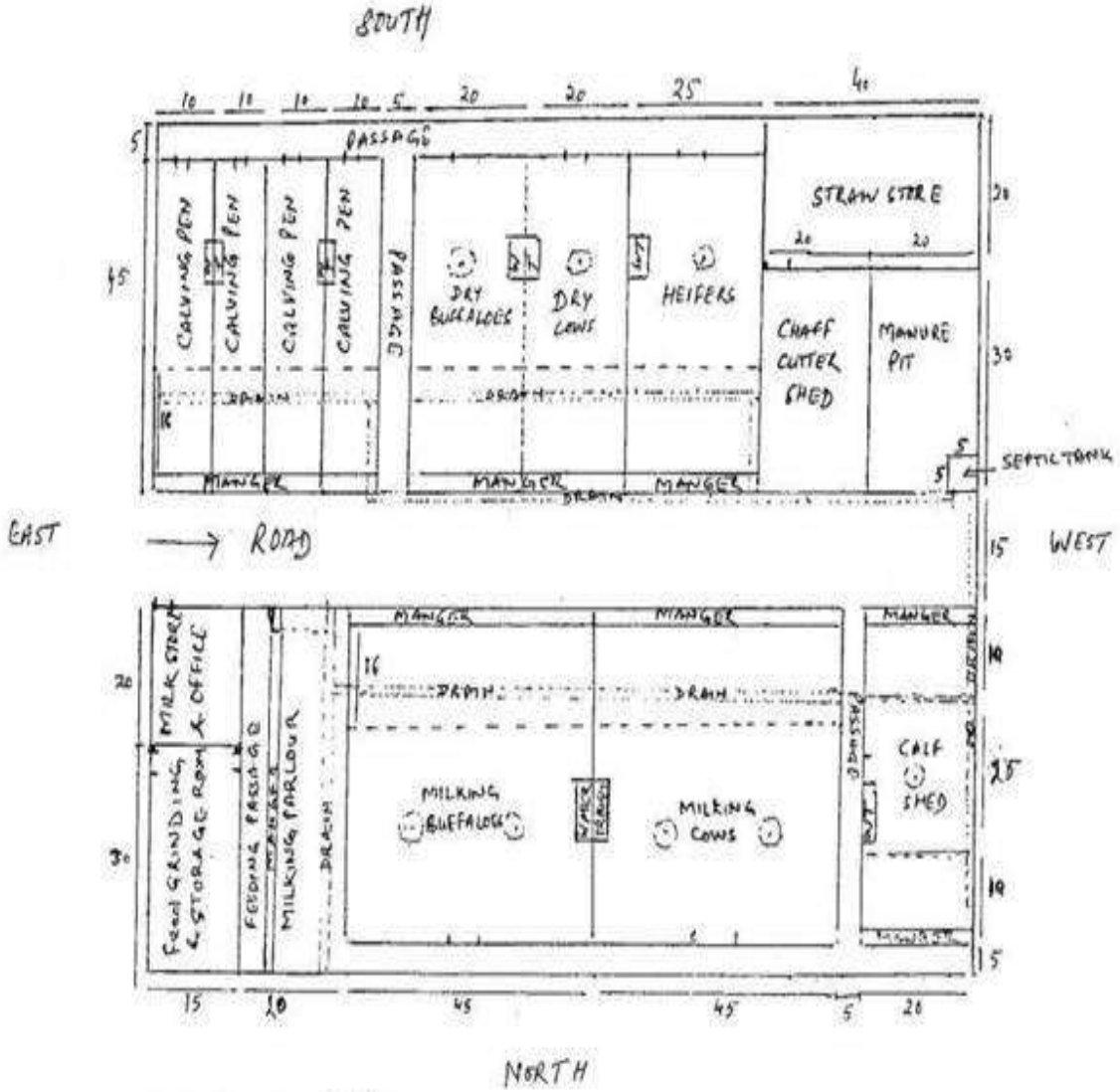

* All dimensions in feet
⊙ Tree, WT - Water trough

VIVA VOCE QUESTIONS

1. What type of soap should be avoided when washing a dairy cow?

The hindquarters, thighs and udder should be washed thoroughly before milking. It is advised to avoid detergent soap for washing.

2. What are dairy animals that are officially recorded in the breed association herd book called?

A registered animal is officially entered on a register or list; formally recorded (of mail) sent using a Post Office service by which compensation is paid for loss or damage to mail for which a registration fee has been paid.

3. Most of what ingredient is removed from skim milk?

Skim milk is basically milk having low percentage of fat. Thus, fat is removed from normal milk in order to make it skim milk

4. What is the condition in which large amounts of gas are trapped in a calf's stomach and the stomach gets big?

Bloating is the condition in which the stomach of the calf gets big. It is due to the air trapped inside the calf's stomach.

5. What is the official record of registered animals of a breed kept by the breed association called?

Registration is an important step to identify the cow. Official records of animal are kept in a heard book.

6. How many points are given to General Appearance on the Dairy Cow Unified Score Card?

General Appearance is one of the parameters on which the cow is judged. It has about 35 points.

7. What is the process called when a calf is switched from milk or milk replaced to water and dry feed?

Weaning is the gradual introduction of a calf to what will be its adult diet and withdrawing the supply of its mother's milk. The process takes place only in mammals, as only mammals produce milk.

EX NO: 5 DESIGN OF SURPLUS WEIR

Design the surplus of a tank forming a part of a chain tanks. The combined catchment area of the group of tanks is 25.89sq. kilometres and the area of the catchment intercepted by the upper tanks is 20.71 sq. kilometres. It is decided to store water in the tank to a level of +12.00m above the M.S.L limiting the submersion of foreshore lands up to a level of +12.75m above M.S.L. The general ground level at the proposed site of work is +11.00m and the ground level below the proposed surplus slopes off till it reaches +10.00m in about 6m distance. The tank bund has a top width of 2m at a level +14.50 with 2:1side slopes on either side. The tank bunds are designed for a saturation gradient of 4:1 with 1m clear cover. Provision may be made to make kutcha regulating arrangements to store water up to M.W.L at times of necessity.

DESIGN STEPS

- Estimation of flood discharge entering the tank
- Length of the surplus weir
- Weir
- Crest width
- Base width
- Abutments, wings, and returns
- Section of the wing wall at C
- Level wing and return
- Downstream side wings and returns
- Downstream transition
- Downstream aprons
- Thickness of solid apron

DESIGN OF SURPLUS WEIR

Estimation of flood discharge entering the tank

Combined catchment area of group of tanks= 25.89sq.kms

Intercepted catchment area of the upper tanks= 20.71sq.kms

Flood discharge entering the tank in question is determined by the formula Type formula here

$Q=CM^{2/3} –CM^{2/3}$

Where C may be assumed as 9.00 and c may be assumed an 1.50

Q= 67.45 cubic meters.

Length of the surplus weir

Water is to be stored up to level of 12.00m. I.E FTL of tank is 12.00 and so, the crest level of the surplus weir has to be kept at 12.00m

Submersion of foreshore lands is limited to 12.75m i.e MWL of the tank is kept at 12.75m therefore head of discharge over the weir is 12.75- 12.00= .75m

Since temporary regulating arrangement are to be made on top of the weir, to store water at times of necessity, grooved dam stones of 15cms x 15cms, will be fixed in the center of the crest at 1-meter intervals with top at MWL

The weir may be assumed as a broad crested weir. So, the discharge per meter length of the weir is given by

$Q= 2/3\ C_d\ L \sqrt{2g}\ h^{3/2}$

Where c_d is 0.562 and h=0.75m

$Q= 1.66\ h^{(3/2)}$

$= 1.66\ h^{(3/2)}$

= 1.08 cubic meters/second

clear length of surplus weir required = 67.45/1.08 = 63.00 meters

Since the dam stones are to be fixed on top at 1-meter clear intervals, the number of openings will be 63. So, the number of dam stones required is 62 nos.

Size of dam stone 15cms x 15cms. And the projecting length above crest will be 75cms. Therefore the

overall length of surplus weir between abutment s is 63.00+ 62x 0.15= 73.50 meters

however, provide an overall length of 75.00meters.

Weir

Crest level + 12.00 FTL

top of dam stone = 12.75 MWL

ground level =11.00

level where hard soil at foundations is met with 9.50

Taking foundations about 0.50meters deeper into hard soil, the foundation level can be fixed at 9.00. The foundation concrete may be usually 0.60m thick

top of the foundation concrete = 9.60

height of weir above foundations = 12.00 – 9.60 = 2.40m

Crest width

Generally, the crest width is assumed as equal to $0.55(\sqrt{H} + \sqrt{h})$.

where H is the height of the weir

h is the head over the weir (both H and h expressed in meters)

$A = 0.55(\sqrt{H} + \sqrt{h})$

$= 0.55(\sqrt{2.4}+\sqrt{0.75}) = 1.3$m

This gives a crest width of about 1.3m. This width may be adopted.

<u>Base width</u>

Check the stability of the weir such that the resultant thrust due to overturning water pressure when water on the upstream side is up to the top of shutters and weight of masonry of the weir passes through the middle third. In such cases the maximum overturning moment due to water thrust is equal to

$Mo=(H+S)^{3/6}$

Where H is the height of weir above the foundation and S is the height of shutters.

The slope of weir on either side being the same, the restoring moment M of the

weir due to the weight of masonry is

$1/12[\{(p+1.5)\ H+2.5S\}\ b^2+a(pH-H-S)\ b-0.5a^2\ (H+3S)]$

Where p= specific gravity of masonry

H= height of weir

A= crest of the weir

B= base of the weir

S= height of the shutters above the weir crest. i.e 1.30 m

S= 0.75, p may be taken as 2.25 substituting these values b will be 2.40 meters.

The weir will have a trapezoidal profile as shown in figure.

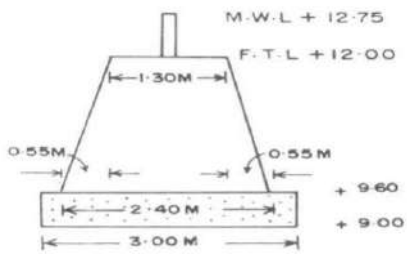

Abutments, wings, and returns

The top width of abutments, wings, and returns will all be uniformly 0.50m with a front batter of 1in 8. Length of the wing walls must be enough to completely encase the tank bund as shown in figure

<u>Abutments</u>

Portion AB is called the abutment. It has its top level same as that of the tank bund at 14.50 and has its length at top same as that of the top width of bund

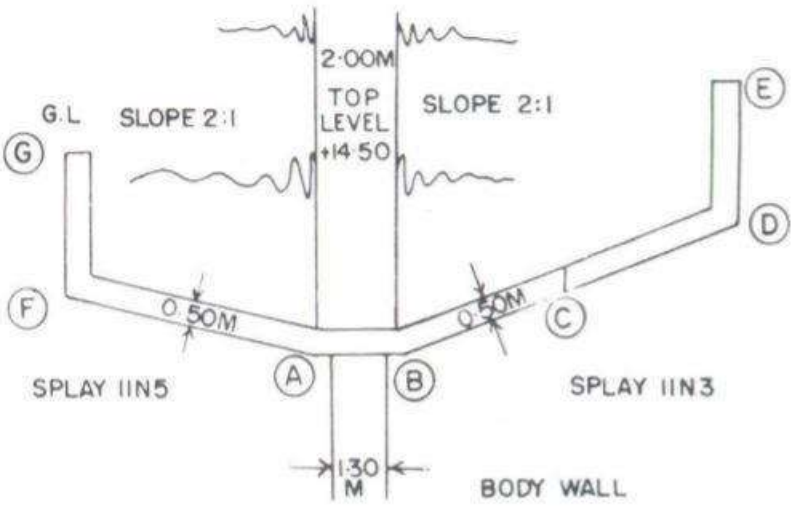

The height of abutment above foundation concrete = 14.50-9.60= 4.90m. The bottom width required is about 4.90x 0.4 = 1.96 or say 2.00m the section indicated in figure.

The wall BD is called upstream wing wall. The section of the wing wall at B is same as the section of the abutment.

This wing wall start sloping down from B till it reaches about 30cms above MWL i.e level of 12.75+0.30 = 13.05 at C.

So, the portion of wing wall BC will be having its top sloping down from 14.50 to 13.05.

Section of the wing wall at C

Height of wall above top of foundation 13.05 9.60= 3.45 meters. base width is required 3.45x0.40= 1.38 or 1.40m adopt the section as given in figure

The top width from B to C is the same as 0.50 meters but the bottom width gets slowly reduced from 2.00 meters at section B to 1.40 meters at section C.

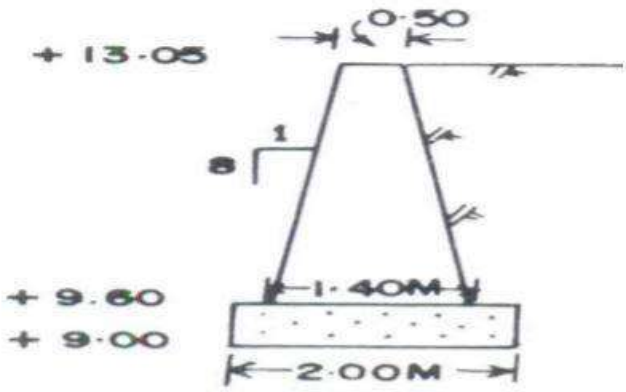

Level wing and return

Since the level wing and return i.e portions CD and DE have to be throughout 30cms above MWL the same section of wall at C can be adopted.

Upstream side transition

In order to give an easy approach, the upstream side wing wall may be splayed as shown. i.e generally at 1 in 3.

Downstream side wings and returns

As the water after passing over the weir goes down rapidly to normal MFL in the water course, the wings and returns need not be high as those on the upstream side. The wing wall from A to F will slope down till the top reaches the ground level at F. The section of wing wall at A will be the same as that of the abutments.

The top wing wall at F may be fixed at 11.00 same as the ground level/ So the height of wall above foundation concrete is 11.00 9.60= 1.40 m

The base width required is 1.40x0.40= 0.56meters or adopt a minimum base width of 0.60meters. provide a section as indicated in figure

The same section is continued for the return FG also.

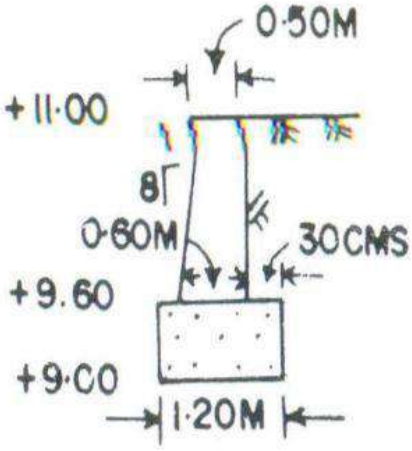

Downstream transition

The downstream side wings are given a splay of 1 in 5 as shown in figure 4.2

Aprons of the weir

The ground level at site of weir is 11.00

Upstream Aprons

Generally, no aprons are required on the upstream side of the weir. However, it is desirable to provide puddle apron as shown in figure.

It is also sometimes provided with nominal rough stone apron 30cms. Thick packed well on puddle clay apron.

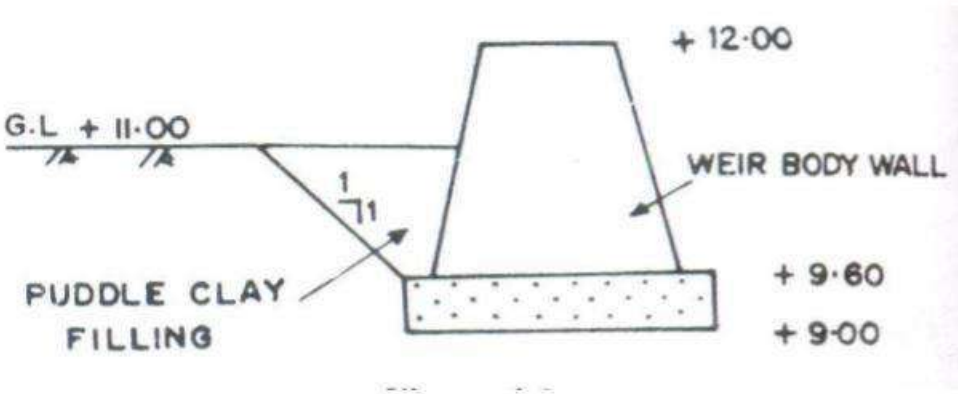

In case where the head of percolation is great, in order to reduce the length of aprons on the downstream side of the weir, it is necessary to provide upstream side solid apron. This apron is not subject to any uplifts and hence can be nominal thickness. However, this acts in

considerably reducing the creep length and consequently reduces the lengths and thickness of aprons, downstream of the weir.

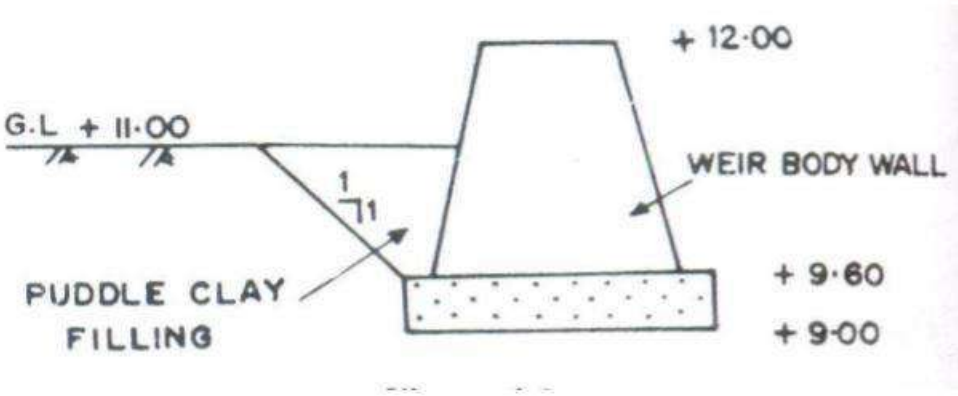

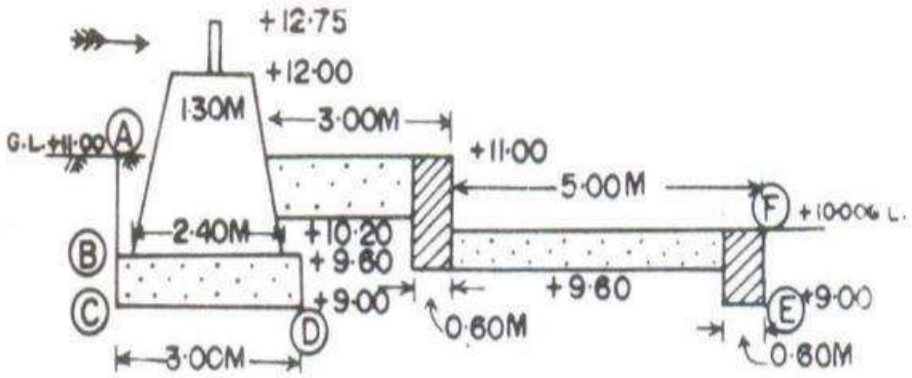

Downstream aprons

Since the ground level is falling down to 10.00 in a distance of about 6 meters, it is desirable to provide a stepped apron as shown in figure.4.6. The stepping may be in two stages.

The aprons may be designed for a hydraulic gradient of 1 in 5 so that the residual gradient at the exit of aprons can be limited to 1 in 5 which is safe enough and will not start undermining the structure.

Maximum uplift pressure are experienced on the downstream aprons when the water level in the tank is upto top of dam stone level i.e to 12.75 with no water on the downstream side.

However assume that the downstream water elevation is ta 10.00 i.e the level of the lowest solid apron.

Total uplift head acting= 12.75 10.00= 2.75meters.

If the residual uplift gradient is to be limited to 1/5, then we require aprons to accommodate a total creep length of 2.75 x 5= 13.75meters. The upstream water has to percolate under the foundations of the weir, if it has to establish any uplifts under the aprons. The possible path of percolation is shown in the figure.

Assuming the puddle apron formed on the upstream of the weir to be not impervoius , the water will start percolating from A at a level of 11.00 and reach B and C . then it will follw CD under the foundation concrete. From here, it will follow the least path D to E under the end cut off and then appear at F. ie the lower solid apron. So, the total length of percolation.

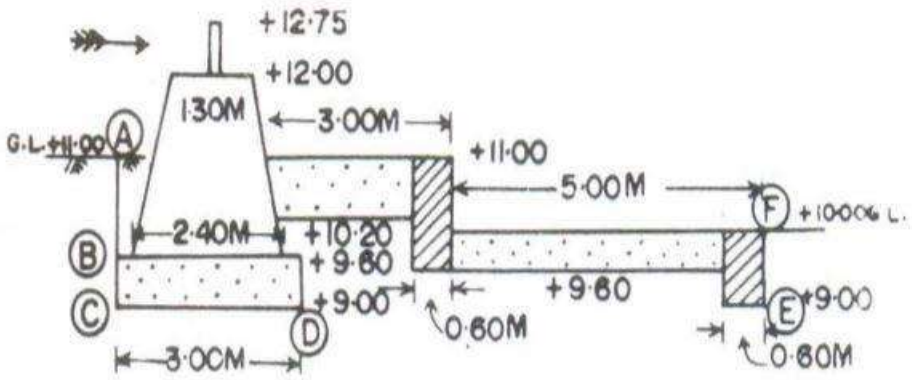

AB+BC+CD+DE+EF = 1.40+ 0.60+ 3.00+DE+ 1.00 = DE+ 6.00

This length must not be less than 13.75 meters , if the structures is to be safe.

DE+ 6.000= 13.75 DE = 7.75meters.

The total length to of solid apron from the body wall as provided in the drawing is 8 meters and this will be enough. These can be reduced if the upstream side puddle clay apron is really impervious. to ensure safety, the whole upstream side apron can be packed with stone and well grouted with cement concrete.

At the end of the second apron retaining wall of the downstream side apron, a nominal 3 to 5 meter length of talus with a thickness of 50cms may be provided as a safety device.

<u>Thickness of solid apron</u>

The maximum uplift on the apron floor is felt immediately above point D in the sketch. Assuming a thickness of 80cms of apron the bottom level of apron is 10.20 creep length from D to the bottom of apron is 1.20meters.

Total creep length from point a on the upstream side upto the point above d under the solid apron is 1.40+ 0.60+3.00+1.20 = 6.20

Head lost in percolation along the path upto the point = 6.20/5 = 1.24meters. Residual head exerting uplift under the apron= 2.75-1.24= 1.51 meters.

Since the bottom of apron is above the assumed tail water elevation, the weight of concrete fully takes care of the uplift, as there is no loss of weight in concrete due to buoyancy.

Each meter depth of concrete can withstand a head of 2.25 meters by a self-weight of apron alone. Allowing an extra 20percent thickness to withstand any variations, the thickness of apron required is (1.51/2.25) x (6/5) = 0.805 meters or say 80cms

So, provide the first solid apron as 80 cms thick. the second apron can be similarly checked and a thickness of 50cms. Will be quite sufficient.

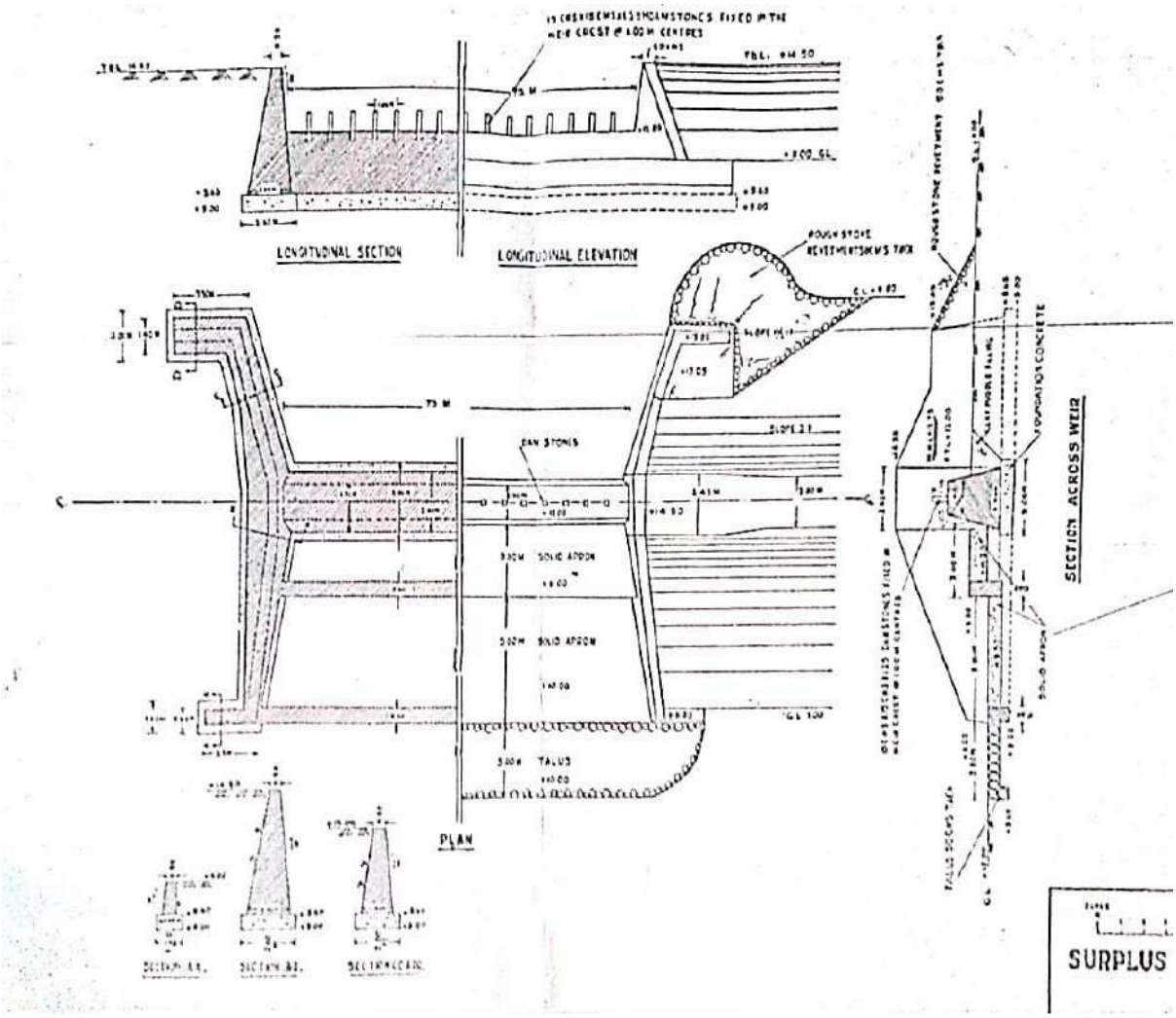
LONGITUDINAL SECTION
LONGITUDINAL ELEVATION
PLAN
SECTION ACROSS WEIR
SURPLUS

VIVA VOCE QUESTION

1. what is capacity of an irrigation tank is sometimes increased by installing a temporary stone wall over the top of the tank weir.

A common practice has been resorted to in South India is to fix dam stones at the crest wall of the weir. The dam stones cause obstruction to the discharge and if no dam stones or shutters are provided above F.T.L, the flood water will start spilling over the surplus work immediately after the tank water level exceeds F.T.L.

2. How the discharge through the sluice of a small irrigation tank is usually controlled?

Flat shutters working in grooves and regulated by screw spears are used in the case of large tanks where the quantity of water to be released is great. Special balanced valves or shutters moving on rollers are generally installed for heads over 9 m or so. A Dam stone causes obstruction to flow and is used sometimes to increase the capacity.

3. What is the approximate value of Ryve's coefficient for combined catchment having limited areas near hills?

For areas within 80 km from the east coast, the value of constant is taken as 6.5 and for areas within 80 to 160 km from the east coast; the value is taken as 8.5. In the case of limited areas near hills, the value of the coefficient is 10.2 and the actual observed values are always up to 40.

4. what is the pipe sluices are generally not adopted in tank bunds where the depth below F.T.L exceeds?

Pipe sluices are earthenware or cement or cast iron pipes which may be used in place of masonry culverts in case of very small slices. The earthenware pipes may get fractured or leakage through their joints may take place resulting in a breach. The pipes can neither be examined nor repaired easily without cutting open the bund. They are not adopted when the depth below F.T.L exceeds 2.5 m or so.

5. If the width of the horizontal floors of type A and D weirs from the foot of the drop wall to the d/s edge of the floor should never be less than.

The width of the horizontal floor of Type-A and Type-D weirs should not be less than 2(D + H) and in important works, the width can be increased to 3(D + H). where D is the height of drop wall and H is the maximum head of water over the wall. The rough stone apron forming a talus below the last curtain wall generally vary from 2.5(D+ H) to 5(D + H) depending upon the nature of the soil and the velocity and annual probable quantity and intensity of run-off.

6. Which of the following type of tank weirs are provided with a number of vertical steps instead of horizontal or sloping downstream apron?

Weirs of Type-D are called as weirs with stepped aprons as they are provided with a number of vertical steps as in case of a stepped fall instead of providing a horizontal or sloping downstream apron. Type-A and Type-D weirs are the most widely adopted.

7. Write the Ryve's formula.

All tank weirs generally in South India are designed on the basis of Ryve's formula which is given by: Qp = C1.A2/3 where Qp is the peak flood discharge, C1 is the Ryve's coefficient, A is the catchment areaThe formula is directly applicable for free catchments in all isolated tanks.

EX NO: 6 DESIGN OF TANK SLUICE WITH A TOWER HEAD

Design a tank sluice with tower head for the following data given below:

Ayacut to be irrigated	= 200 ha
Duty	= 1000 ha/cumec (side slope 2:1)
Top width of tank bund	= 2 m
The top level of bank	= +40.00
The ground level at the site	= +34.50
Hard soil for foundation	= +33.50
The sill of the sluice at off take	= +34.00
The maximum water level in tank	= +38.00
The full level of tank	= +37.00
Average low water level in tank	= +35.00
The channel bed level	= +34.00
Fully supply level	= +34.50
Bed width	= 1.25 m
Top level of bank	= 35.50
Side slopes of channel	= 1.5:1

<u>Components to be designed</u>

- Discharge
- Vent-way
- Sluice barrel
- R.C.C slab
- Side walls
- Tower head
- D/S cistern
- Talus
- U/S wing walls

<u>Discharge</u>

Ayacut = 200 ha

Duty = 1000 ha/cumec

Discharge = 200/1000 =0.2 cumec

Vent –way

The area of the vent way should be such that it should be able to draw the normal supplies of water even under a head of 25 cm

The average low water level = +35.00

Sill level of the sluice = +34.00

The head causing flow => 35.00 -34.00 = 1.00 m

However, the minimum driving head is 25 cm is considered. Assuming circular opening of vent –way the discharge is given by

$Q = Cd\ A\sqrt{2gh}$

from above equation

area A=0.151 m^2

where Q = Discharge through vent =0.2 m^3/s

Cd = coefficient of discharge =0.60

A = area of vent way in m^2

h =Driving head =0.25m

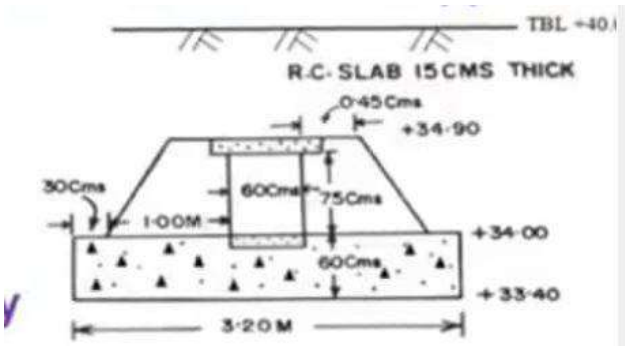

This gives approximately a diameter of 45 cm for a circular opening. This can be adopted. However, from-practical point of view the minimum size of the barrel is about 60 cm x 75 cm so as to allow an operator to repair, cleaning etc. So, insert a diaphragm stone with 45 cm diameter opening in it. This will be placed at the entrance to the sluice barrel with regulating arrangements in front of it.

Sluice barrel

The sluice barrel is buried under the tank bund. The barrel will have two masonry side walls with an RCC slab as roof

The foundations of the two side walls is continuous in concrete with 60 cm thick. with a wearing coat of richer concrete of 10 cm thickness serving as a floor for the barrel in between the side walls.

R.C.C. slab

The R.C.C. slab is designed for the clear span of 60 cm supporting the overburden(earth over the slab)

Designing for the maximum possible load (i.e., considering the section at the

centre of the bank)

Resisting moment(M) = Rbb^2

Bending moment (M) =w12/8 = WI/8

Where, W is the total weight self + weight weight of earth over the slab

(i) Self-weight:

Assuming slab thickness of 15 cm and sp. weight of concrete is 2500 kg/m3

Effective span = c/c of supports = 60 + 15 = 75 cm = 0.75 m.

Taking 1m width of a slab,

self weight of the slab = 2500 x 0.15 x 0.75 x 1 = 281.25 kg. = 282 kg (Say)

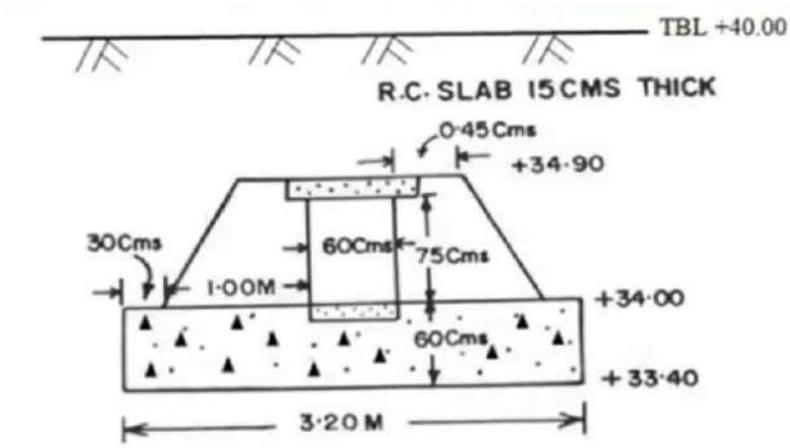

(ii) weight of earth over the weight of Overburden:

Height of the bank over the slab = 40003490 = 5.10 m

Assuming specific weight of saturated earth is 2240 kg/ m3

Weight of the earth 2240 x 5.10 x 0.75 x 1 = 8568 kg

Total weight (W) 8568+ 282 = 8850 kg

M_b=B.M=WL/8=8850*0.75/8

=829.69 kg m =(8139259 N mm)

Using M20 concrete and Fe 415 steel

R=0.138 fck = 0.138 x 20 = 2.76

M_r=Rbd^2,

a) $M_b = M_r$

8139259 = 2.76 x 1000 x d2 (unit width, b =1 m=1000 mm)

d = 54.3 mm = 5.43 cm

effective depth d 5.43 cm assuming effecting cover 2.5 cm

The overall depth = 5.43 cm + 2.5 cm = 7.93 cm > 15 cm

The depth of 15 cm assumed in the design may be adopted

<u>Side walls</u>

These are subjected to lateral earth pressure and also the weight of

surcharged earth standing on the side wall and roof slab. Critical condition for stability of the side wall is barrel running empty and the

soil is saturated. The stability of one wall is checked by assuming a side wall of 1 m bottom width and top width 0.45 m as shown in Fig.

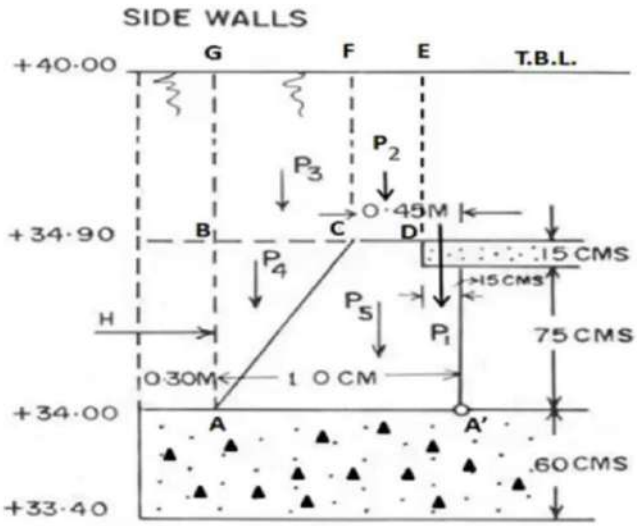

Earth pressure:

Using Rankine's theory, the total horizontal earth pressure on the wall at

point (A) to be calculated.

Height of the earth fill above A = 40003400 = 6.00 m

Assuming, specific weight of saturated earth (y) 2240 kg/m3 and angle of repose (0) = 30°

Earth pressure at

A = Ýh((1−" sin 30")/(1+" sin 30")) = 2240 x 6.0 x((1−" sin 30")/(1+" sin 30"))

=4480kg/m^2

Similarly, Earth pressure at C = 2240 x 5.1 x 1/3 3808 kg/m^2

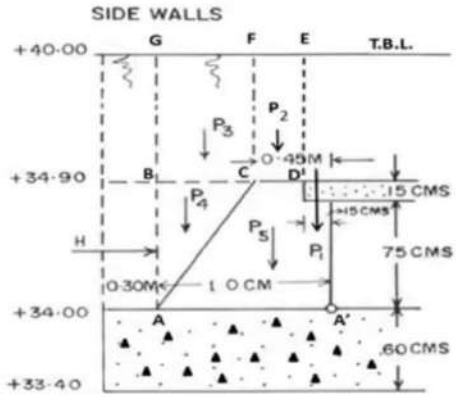

Total horizontal thrust on the side wall = $\frac{(4480+3808)}{2} x0.90$

H = 3730 kg

This acts at a height of $\frac{0.9}{3}\left(\frac{2x3808+4480}{3808+4480}\right) = 0.44$ m

= 44 cm above point A

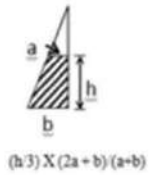

(b) <u>Weight transmitted by the roof slab (P1)</u>

Load coming on each side wall = 8850/2 = 4425 kg

This acts vertically on the side wall at a distance of 7.5 cm from the vertical face of the side wall

(c) <u>Weight of earth in portion CDEF (P2)</u>

Top width of wall from C to D = 0.45-0.15 = 0.30 m

Height of earth standing = 40003490 = 5.10 m

The weight of earth (P2) = 0.30 x 5.10 x 1 x 2240

=3427 kg

This acts vertically on the side wall at a distance of

15 + 30/2 =30 cm

from the vertical face of the side wall

(d) <u>Weight Of earth in portion BCFG (P3)</u>

Width of BC = 1.00 -0.45 = 0.55 m

Height of earth = 40 - 34.90 = 5.10 m

The weight of earth (P,) 0.55 x 5.1 x 1 x 2240 = 6283 kg

This acts vertically at a distance of 45 + 55/2=72.5 cm from the vertical face of side wall

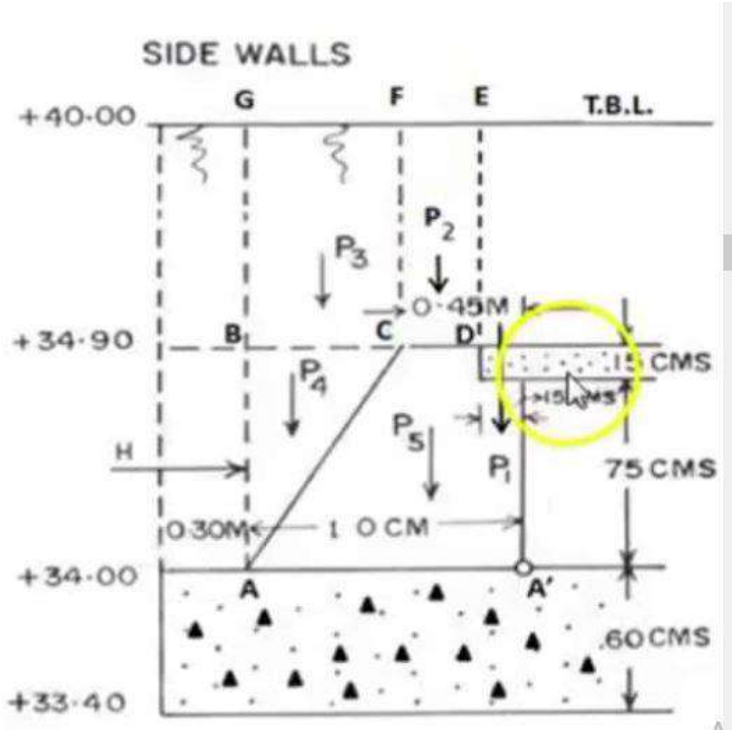

(e)Weight of earth in portion ABC (P4)

Width of BC = 1.00 -0.45 = 0.55 m

Height of earth 34.90-34.00=0.90 m

The weight of earth (P4) = 1/2x0.55 x 0.9 x 1 x 2240 = 555 kg

The acts vertically at a distance of 45 + 2/3 x 55

=81.7 cm from the vertical face of the side wall

(f) Weight of masonry side wall (P5)

Assuming specific weight of masonry = 2100 kg/m

Area of the wall $=\frac{(0.45+1.00)}{2}$ x 0.9

P5 = $\frac{(0.45+1.00)}{2}$ x 0.9 x 1 x 2100 =1370 kg

This acts vertically at a distance of

$\frac{(0.9)}{3}$ x $\frac{(1+2\ X\ 0.45)}{1+0.45}$ = 0.39 = 39 cm

From the vertical face of the side wall.

Stability analysis

Force	Force (kg)			
	Horizontal	Vertical	Lever arm (cm)	Moment (kg cm)
P_1		4425	7.5	33188
P_2		3427	30	102810
P_3		6283	72.5	455518
P_4		555	81.7	45344
P_5		1370	39	53430
H	3730		44	(-) 164120
Total	**3730**	**16060 kg**		**526170 kg cm**

Lever arm of the resultant from Toe = $\frac{526170}{16060} = 33$ cm

Eccentricity = $\frac{100}{2}$ - 33 cm = 17 cm > 16.7 cm (allowable eccentricity = 100/6 = 16.7 cm)

So, the resultant is just outside middle third

Maximum compression at Toe = $\frac{16060}{100x100}(1+\frac{6x17}{100}) = 3.24$ kg/cm^2 < **30 kg/cm^2**

Tension at the heal (A) = $\frac{16060}{100x100}(1-\frac{6x17}{100}) = 0.032$kg/Cm^2 < **1.25 kg/cm^2**

(maximum allowable tension)

Hence the section assumed is safe and can be adopted

Tower Head

The tower head consists of masonry well

Top level of the well = 30 cm above M.W.L = 0.30 + 38.00 = +38.30

Bottom level of the well = Floor of the sluice barrel

= top of foundation concrete = +34.00

Height of the well = 38.30-34.00 = 4.30 m

The shutter operating arrangement, and steps are provided in the well

The diameter of the wall should be so fixed based on the practical requirement, so as to allow operator into the well.

Therefore, a minimum diameter of 1.25 m is provided as the inner diameter of a Well.

In order to resist the lateral earth pressure, the thickness of the wall should be Adequate.

Instead of assuming uniform thickness of wall throughout, assuming a thickness of wall 0.65 m up to +36.50 and 0.45 m above it up to the top of well.

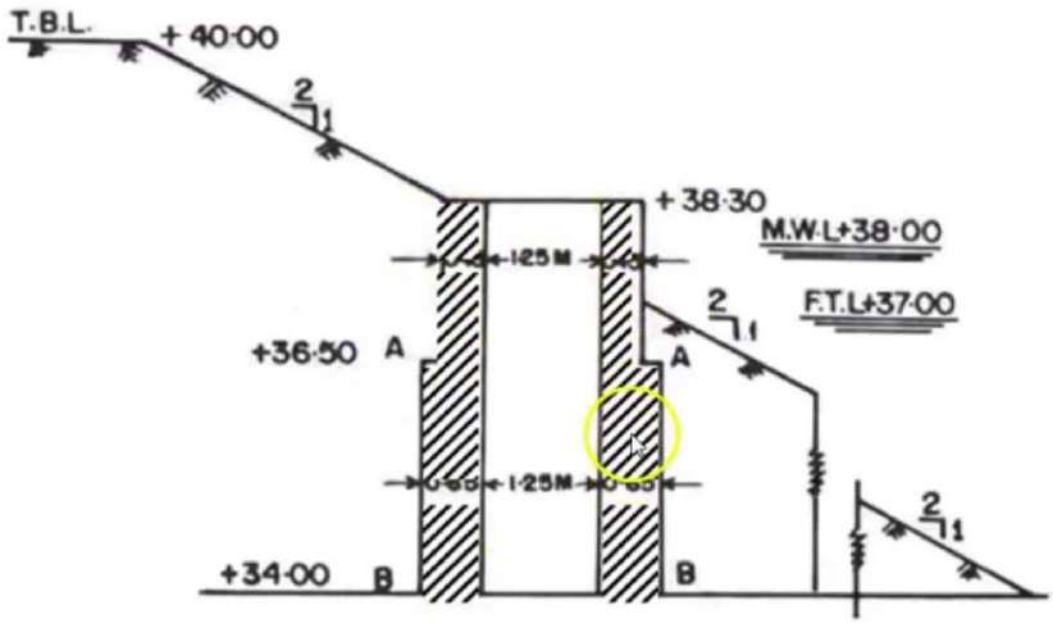

However, the wall thickness of a well is to be checked for radial earth pressure using thick cylinder theory.

Downstream cistern

The purpose of cistern is to act as a stilling basin for the on rushing waters through the barrel and reduces any possible scours in the channel. Generally, the cistern is used to take off more than one channel through separate openings in its side walls. But, in this case only one channel is Proposed The top level of the cistern TBL of the channel +35.50

Bottom level =Bed level = +34.00

- height of the wall = 35.50-34.00 = 1.50 m
- Top thickness of the wall = 0.45 m (assuming)

Bottom thickness of wall = 0.4 x height
= 0.4 X 1.5
= 0.6 m

The inner dimensions are taken arbitrarily

Talus

A nominal talus is proposed in the channel in continuation of the cistern for a length of 3 to 5 m

U/S wing walls

In order to facilitate easy approach of water into the barrel pair of wing walls are provided at the beginning of the side walls as shown in drawing.

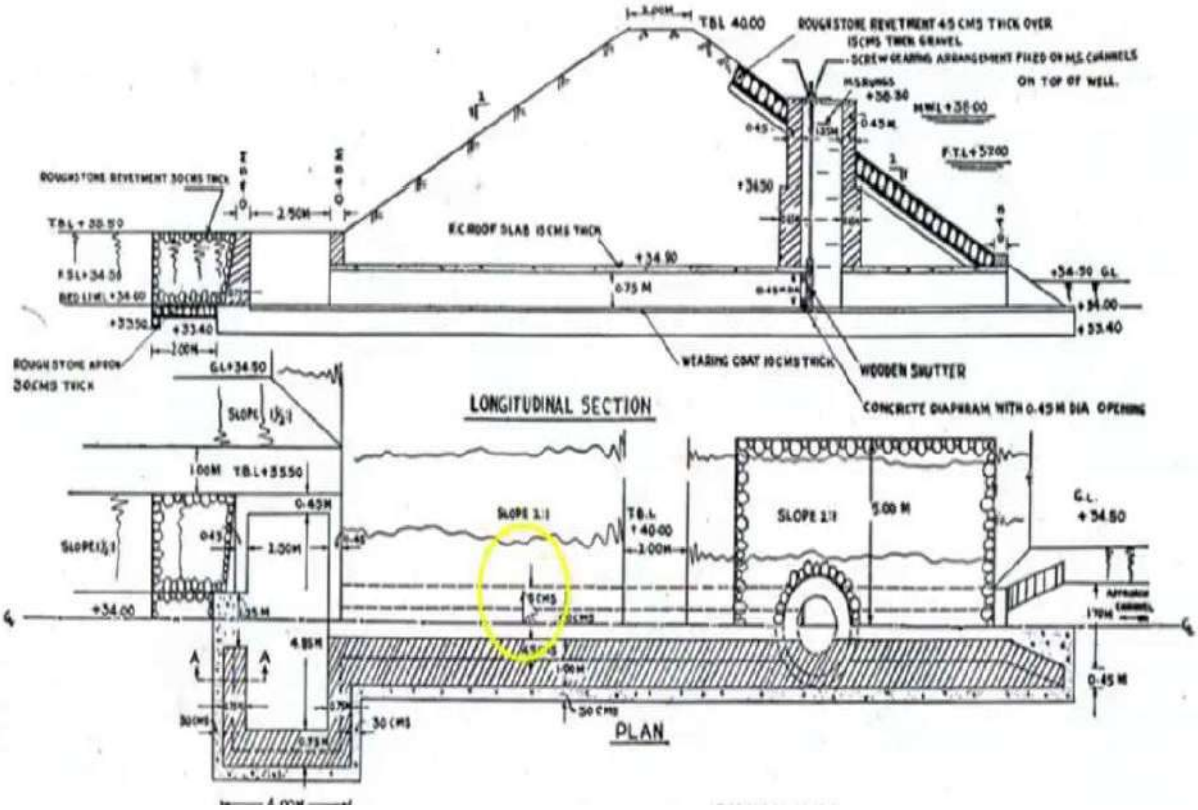
LONGITUDINAL SECTION
PLAN
ROUGHSTONE REVETMENT 45 CMS THICK OVER 15CMS THICK GRAVEL
SCREW GEARING ARRANGEMENT FIXED ON M.S. CHANNELS ON TOP OF WELL.
ROUGHSTONE REVETMENT 30CMS THICK
R.C. ROOF SLAB 15CMS THICK
WEARING COAT 10CMS THICK
WOODEN SHUTTER
CONCRETE DIAPHRAM WITH 0.45M DIA OPENING
ROUGHSTONE APRON 30CMS THICK
SLOPE 2:1
T.B.L. +40.00
G.L. +34.50
5.00 M
30 CMS

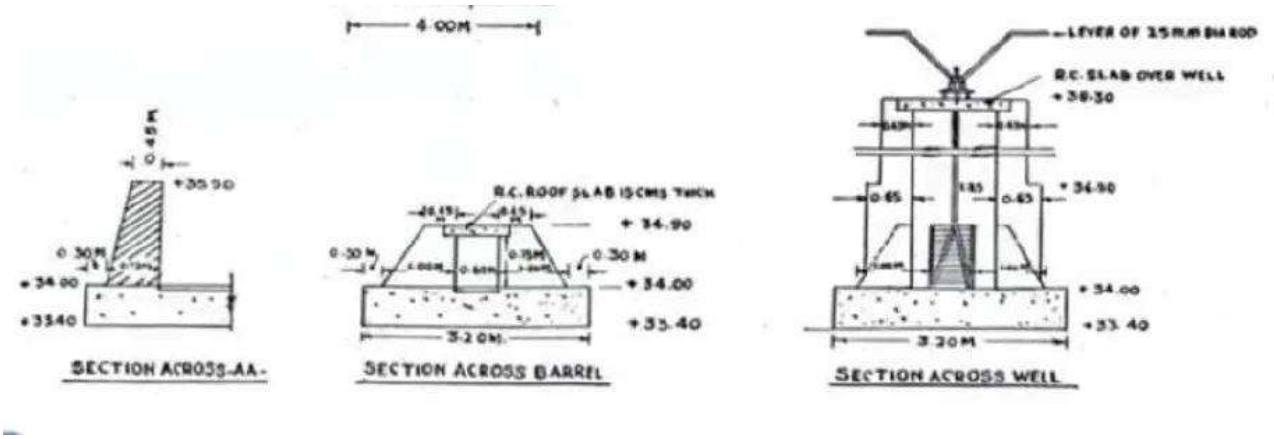
4.00M
LEVER OF 25MM DIA ROD
R.C. SLAB OVER WELL
R.C. ROOF SLAB 15CMS THICK
SECTION ACROSS-AA-
SECTION ACROSS BARREL
SECTION ACROSS WELL
3.20M

VIVA VOCE QUESTIONS

1. What is the storage created on the upstream side of a smaller stream by the construction of low earthen bunds is technically?
   The storage irrigation scheme utilizes the stored water on the upstream side of a smaller earth dam i.e. bund. These earthen bund reservoirs are called as tanks. Such works are very common in South India but this terminology is limited to India only.
2. What is the approximate value of side slope of the bund for smaller tanks with water depths not exceeding 2.5 m in favorable soils such as red and white gravel, red and black loams?
   For smaller tanks with water depths not exceeding 2.5 m in favorable soils such as red and white gravel, red and black loams, the side slope may be taken as 12 : 1 and 2 : 1 for larger ones up to 5 m in depth. The slopes may be kept in between 2 : 1 and 2 12 : 1 in light sandy, black cotton or clayey soils.
3. What is the usual arrangement made in a tank-bund scheme to spill the surplus excess water?
   To avoid overtopping of the tank bund in case of all dam reservoir projects, tanks are provided with arrangements for spilling the excess surplus water. These arrangements may be in the form of a surplus escape weir provided in the body or at one end of the tank bund. In the case of earth dam projects, some other arrangements like a siphon spillway can be provided.
4. What is the most adopted earthen section for tank bunds?
   Homogeneous embankment has been constructed with the soils excavated from pits in the immediate vicinity of each bund and carried by the head load to the bund. Most of the tank bunds of South India belong to this type.
5. Where the top-level of a tank weir in a tank bund scheme is kept?
   The top-level i.e. crest level of the tank weir is kept at F.T.L. The extra water is discharged over the surplus escape weir when the tank is full up to F.T.L. The design of the length or capacity of this surplus escape weir is such that the water level in the tank never exceeds the M.W.L.
6. Why the provision of suitable breaching sections becomes more important in irrigation tanks which are isolated.
   A breaching section is a length kept lower and weaker than the remainder of the bound so as to localize a breach in that length only. A breach occurring in a tank supplements the surplus power to a reasonable degree to the greater security both of the tank itself and those below it in the group.
7. What is the cubic meters of water that can be stored in an irrigation tank between full tank level and skill level of the lowest supply sluice.
   The cubic content of water stored in the tank up to F.T.L is called the gross capacity of the tank. The cubic content of water stored between F.T.L and the bottom or sill level of the lowest supply sluice is the effective capacity of the tank. These capacities can be computed by using the contour plan of the area of the water spread.

EX NO: 7 DESIGN OF CROSS DRAINAGE WORK

Design a suitable cross-drainage work, given the following data at the crossing of a canal and drainage.

Canal: Drainage:

Full supply discharge = 32 cumecs High flood discharge = 300 cumecs

Full supply level = R.L. 213.5 High flood level = 210.0 m

Canal bed level = R.L. 212.0 High flood depth = 2.5 m

Canal bed width = 20 m General ground level = 212.5 m.

Trapezoidal canal section with 1.5 H: 1 V slopes.

Canal water depth = 1.5 m

Design

Since the drainage is of large size, work of Type III will be adopted. Also, because the canal bed level (212.0) is much above the HFL of drainage (210.0), an aqueduct will be constructed. To affect economy, the canal shall be flumed.

Design of Drainage Waterway

Lacey's regime perimeter = P = 4.75 $\sqrt{Q}$= 4.75$\sqrt{300}$ = 82.3 m

Let the clear span between piers be 9 m and the pier thickness be 1.5 m.

Using 8 bays of 9 m each, clear waterway = 8 X 9 = 72 m.

Using 7 piers of 1.5 m each, length occupied by piers = 7 X 1.5 = 10.5 m

Total length of waterway = 72 + 10.5 = 82.5 m

Design of Canal Waterway

Bed width of canal = 20.0 m

Let the width be flumed to 10.0 m

Providing a splay of 2: 1 in contraction, the length of contraction transition = ((20-10)/2) *2 = 10m

Providing a splay of 3: 1 in expansion, the length of expansion transition = ((20 – 10)/2) *3= 15 m

Length of the flumed rectangular portion of the canal between abutments = 82.5 m

In transitions, the side slopes of the canal section will be warped in plan from the original slope of 1.5: 1 to vertical.

Head loss and bed levels at different sections

Area of trapezoidal canal section = (B + 1.5 y) y

$= (20+1.5 \times 1.5) \times 1.5 = 33.75\ m^2$

Velocity = $V_4 = \left(\frac{Q}{A}\right) = \frac{32}{33.75} = 0.947$ m/s

Velocity head = $\frac{V_4^2}{2g} = \frac{(0.947)^2}{2X\ 9.81} = 0.046$ m

R.L of bed at 4-4 = 212.0 m (given)

R.L of water surface at 4-4 = 212.0 + 1.5 = 213.5 m

R.L of TEL at 4-4 = 213.5 + 0.046 = 213.546 m

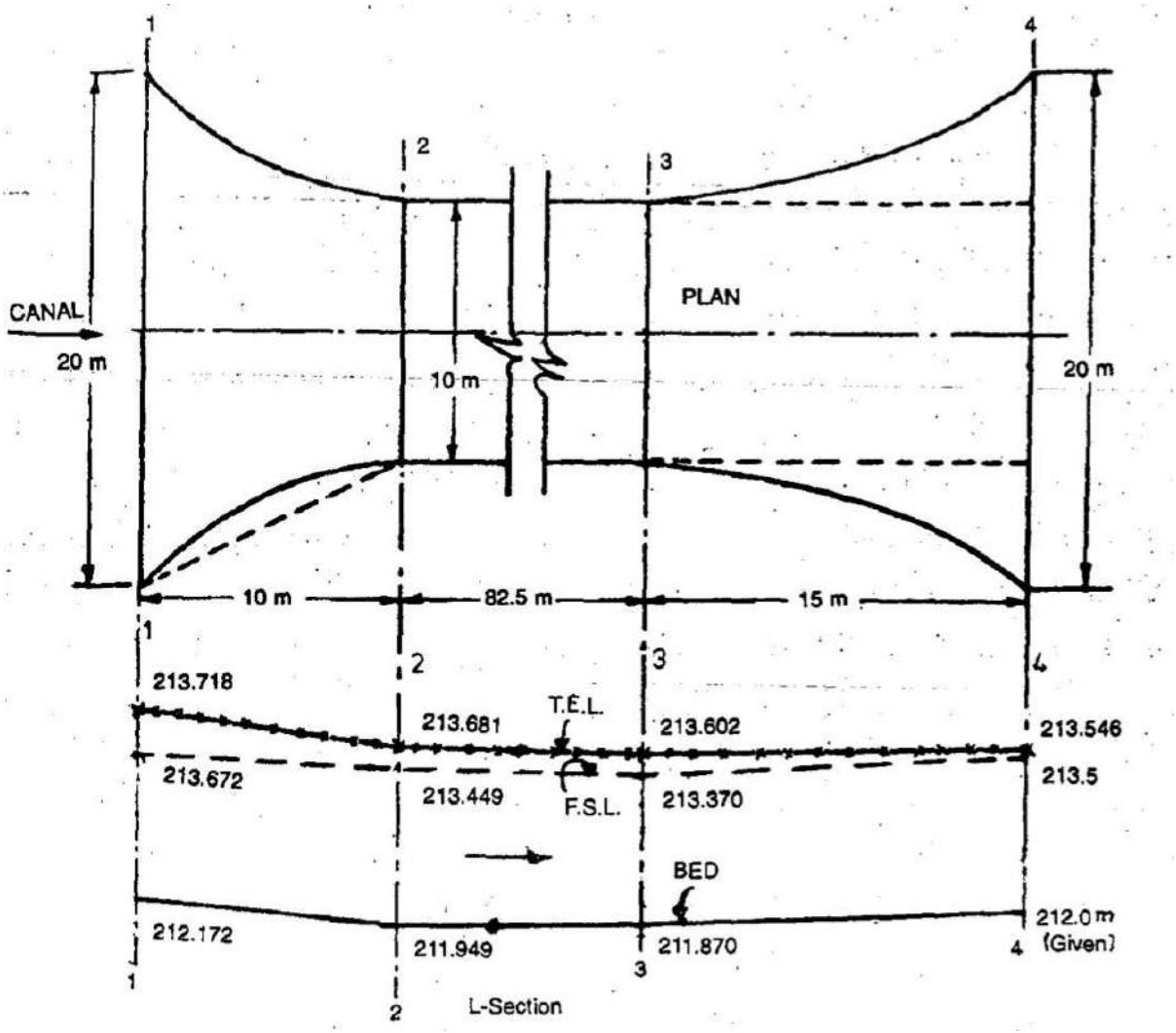

At section 3-3

Keeping the same depth of 1.5 m throughout the channel, we have Bed width = 10 m

Area of channel = 10 X 1.5 = 15 m^2

Velocity = V3 = $\left(\frac{Q}{A}\right) = \frac{32}{15} = 2.13$ m/s

Velocity head = $\frac{V_3^2}{2g} = \frac{(2.13)^2}{2X\ 9.81}$ = 0.232 m

Assuming that the loss of head in expansion from section 3-3 to 4-4 is taken = $0.3\left(\frac{V_3^2 - V_4^2}{2g}\right)$

= 0.3 [0.232 – 0.046] = 0.056 m

R.L of TEL at section 3-3 = R.L of TEL at 4-4 + loss in expansion = 213.546 + 0.056

= 213.602 m

R.L of water surface at 3-3 = R.L of TEL at 3-3 – velocity head

= 213.602 – 0.232 = 213.370 m

R.L of bed at 3-3 = 213.370 – 1.5 = 211.87 m

At section 2-2

From section 2-2 to 3-3, the trough section is constant. Therefore, area and velocity at 2-2 are same as at 3-3, there is a friction loss between 2-2 and 3-3 which is given by manning's formula.

$$H_L = \frac{n^2.v^2.L}{R^{2/3}}$$

= $((0.016)^2$ X $(2.13)^2$ X 82.5)/ $(1.16)^{2/3}$

= 0.079.

R.L of TEL at section 2-2 = R.L of TEL at 3-3 + friction loss

= 213.602 + 0.079 = 213.681 m

R.L of water surface at 2-2 = R.L of TEL at 2-2 – velocity head

= 213.681 – 0.232 = 213.449 m

R.L of bed at 2-2 = 213.449 – 1.5 = 211.949 m

At section 1-1

Loss of head in contraction transition from 1-1 to 2-2 = $0.2\left(\frac{V_2^2 - V_1^2}{2g}\right)$ = 0.037 m

R.L of TEL at section 1-1 = R.L of TEL at 2-2 + Loss in contraction

= 213.681 + 0.037 = 213.718 m

R.L of water surface at 1-1 = R.L of TEL at 2-2 – velocity head

= 213.718 – 0.046 = 213.672 m

R.L of bed at 1-1 = 213.672 – 1.5 = 212. 172 m

<u>Design of Transitions</u>

(a) Contraction transition: Since the depth is kept constant, the transition can be designed on the basis of Mitra's method.

$$B_x = \frac{B_n . B_f . L_f}{L_f B_n - (B_n - B_f)x}$$

$$= \frac{20\ X\ 10X\ 15}{15X\ 20 - X(20-10)} = \frac{3000}{300 - 10\ x}$$

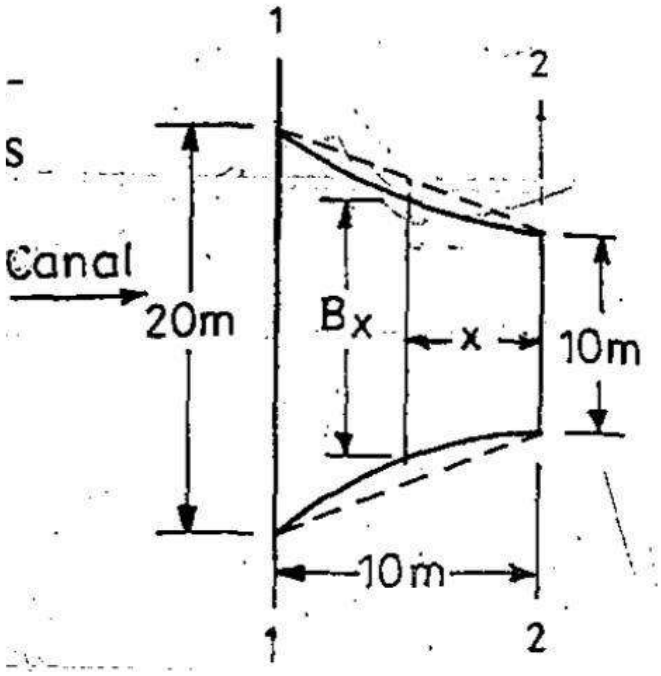

For various values of x lying between 0 to 10 m, various values of are worked out by using the above equation as:

X in meter	0	2	4	6	8	10
$B_x = \frac{3000}{300 - 10\ x}$	10.0	11.11	12.5	14.29	16.67	20.0

The contraction transition can be plotted with these values.

(b) Expansion transition:

$$B_x = \frac{B_n . B_f . L_f}{L_f B_n - (B_n - B_f)x}$$

$$= \frac{20\ X\ 10X\ 15}{15X\ 20 - X(20-10)} = \frac{3000}{300 - 10\ x}$$

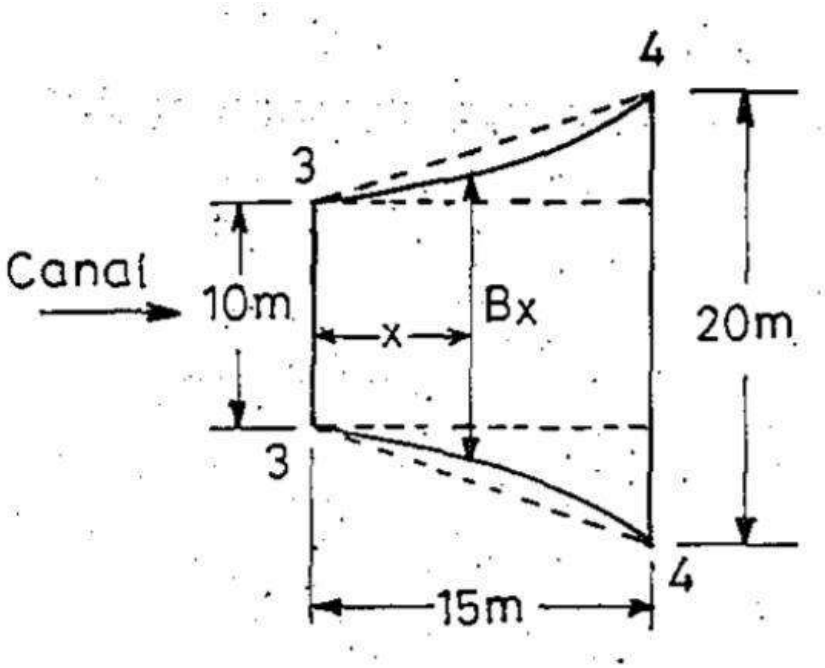

For various values of x lying between 0 to 15 m, various values of are worked out by using the above equation as:

X in meter	0	2	4	6	8	10	12	14	15
$B_x = \frac{3000}{300 - 10\,x}$	10.0	10.71	11.54	12.5	13.64	15.0	16.67	18.75	20.0

The expansion transition can be plotted with these values

Design of Trough

The trough shall be divided into two compartments of 5 m each and separated by an intermediate wall of 0.3 m thickness. The inspection road shall be carried on the top of left compartment as shown in figure below.

A freeboard of 0.6 m above the normal water depth of 1.5 m is sufficient, and hence the bottom level of bridge slab over the left compartment can be kept at 1.5 + 0.6 = 2.1 m above the bed level of trough. The entire trough section can be constructed in monolithic reinforced concrete and can be designed by usual structural methods.

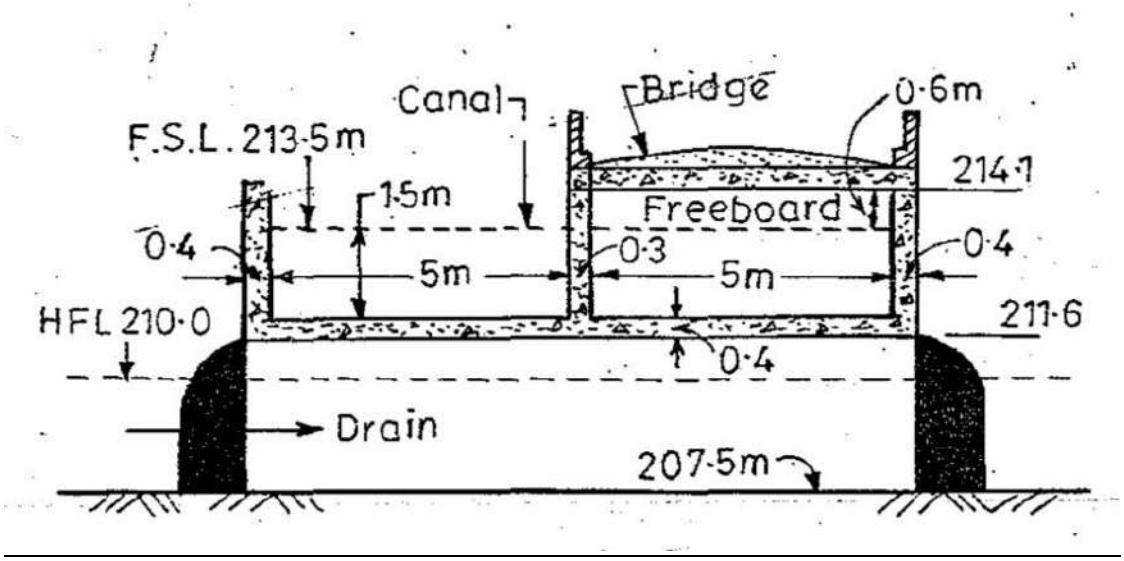
Canal
Bridge
0·6m
F.S.L. 213·5m
214·1
1·5m
Freeboard
0·4
0·3
0·4
5m
5m
HFL 210·0
211·6
0·4
Drain
207·5m

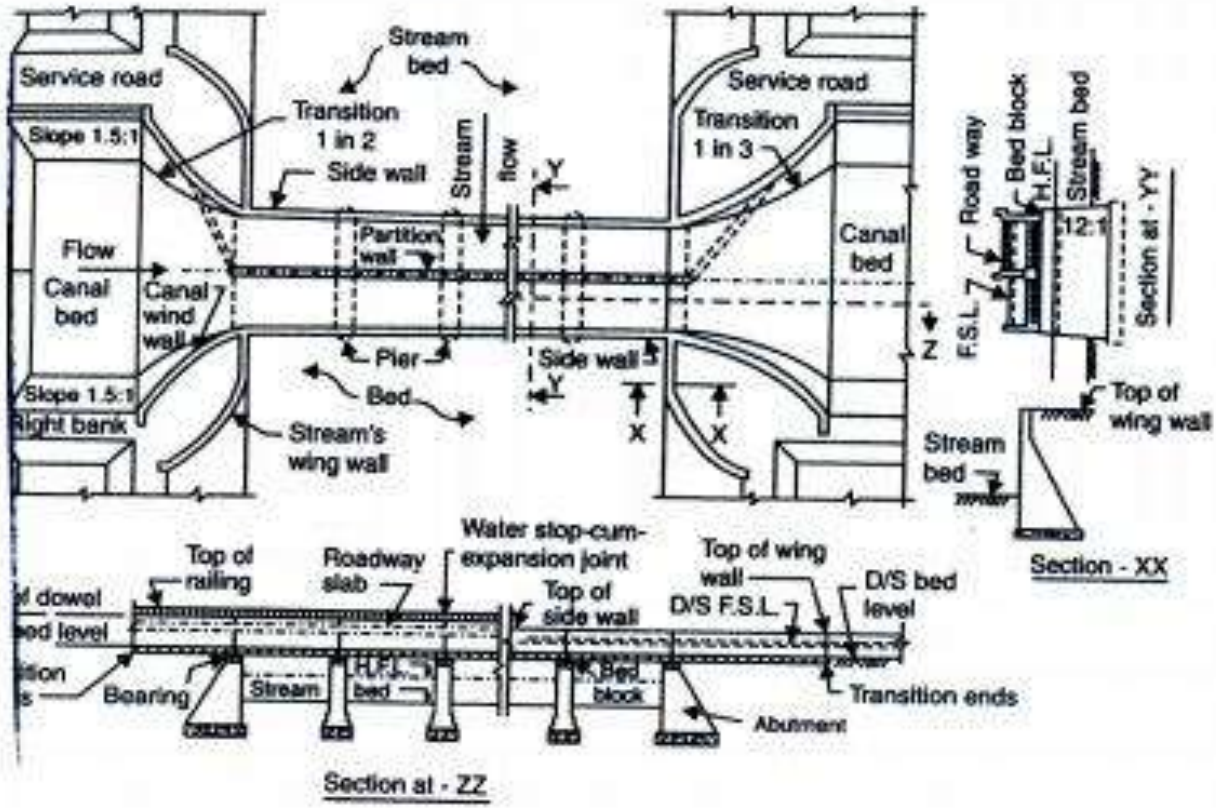
Stream bed
Service road
Service road
Transition 1 in 2
Transition 1 in 3
Slope 1.5:1
Side wall
Stream flow
Y
Flow
Canal bed
Canal wind wall
Partition wall
Canal bed
Pier
Side wall
Bed
Slope 1.5:1
Right bank
Stream's wing wall
X
X
Z
Road way
Bed block
H.F.L.
Stream bed
12:1
F.S.L.
Section at - Y'Y
Top of wing wall
Stream bed
Section - XX
Water stop-cum-expansion joint
Top of railing
Roadway slab
Top of wing wall
D/S bed level
Top of side wall
D/S F.S.L.
Bearing
Stream
H.F.L.
bed
Bed block
Transition ends
Abutment
Section at - ZZ

VIVA VOCE QUESTIONS

1. What is Lacey's equation for fixing the approximate value of the required waterway for the drain?
   The correct equation for fixing the waterway requirement for Aqueduct and Syphon-Aqueducts is given by $P = 4.75\ Q^{1/2}$ where P is the wetted perimeter in meters and Q is the total discharge in cumecs. The wetted perimeter may be taken equal to the width of the drain and equal to the waterway required in case of wide drains.
2. What is the maximum permissible reduction in the waterway from Lacey's perimeter?
   The width of the perimeter should be so adjusted as to provide the required perimeter i.e. minimum value = 0.8P in case of small drains. From Lacey's perimeter, the maximum permissible reduction in the waterway is 20% and the provision is made in a suitable number of bays or spans.
3. What is the permissible velocity through the barrels is generally limited?
   The permissible velocity through the barrels is generally limited to 2 to 3 m/sec. A higher value of velocity requires higher and longer marginal banks since it causes quick abrasion of the barrel surfaces by the rolling grit and results in a higher amount of afflux on the U/s side of the aqueduct.
4. Which of the following method is applicable for the design of channel transition when the water depths of the flumed and unflumed section are the same or maybe different?
   Mitra's method was derived on the basis that the rate of change of velocity per unit length remains constant (i.e. water depth). Chaturvedi's method is used for the design of channel transitions when water depth remains constant.
5. In a siphon aqueduct, the worst condition of uplift on the floor occurs.
   In siphon aqueducts, the uplift due to water table acts where the bottom floor is depressed below the drainage bed. The maximum uplift under the worst condition is when there is no water flowing in the drain and the water table has risen up to drain bed.
6. Which of the following wings protect the earthen slopes of the canal and also guide the drainage water?
   Canal wings or land wings provide a strong connection between sides of canal trough and earthen canal banks. Drainage wings or water wings or river wings provide a vertical cut-off for the water seeping from the canal into the drainage bed. It also protects the earthen slopes and guide the drainage water and join it to the guide banks.
7. The head loss through a siphon barrel is usually given by Unwin's formula by neglecting velocity of approach as HL = [1 + F1 + F2. L/R] V2/2g, where F1 and F2 respectively represent the coefficient of head losses due to?
   The head loss through siphon barrels by Unwin's formula is given as: HL = [1 + F1 + F2. L/R] V2/2g where F1 is coefficient of head loss at entry and F2 is coefficient such that loss of head due to surface friction is given by F2 = a[1+b/R], a and b are the values depending upon the material of the surface of the barrel.

EX NO: 8 **DESIGN OF CANAL REGULATION**

Full supply discharge: 16 cubic meters/second

Bed width: 15 meters; Bed level: 20.00

F.S. depth: 1.75 meters; F.S.L: +21.75

Top level of bank: +22.75

Top widths of banks are the same as those on the upstream side. The regulator carries a road way single lane designed for L.R.C. loading class 'A'. Provide clear freeboard of one meter above F.S.L. for the road bridge.

Good foundation soil is available at + 19.00

Assume the ground level site as + 22.00

Design Steps

- Fixing The Vent way By
- Drowning Method
- Downstream Of Regulator
- Roadway
- Pier
- Shutters
- Abutments
- Wing Walls
- Solid Apron for The Regulator
- Revetments

VENTWAY OF THE REGULATOR

Quantity of water to be passed through the regulator into the downstream of canal is 16 cubic meters/second

Depth of water in the canal below is 1.75 meters

Depth of ventway is therefore 1.75 meters Applying the formula

$Q = C_d A\sqrt{2gh}$ (Submerged orifice formula)

where Q is the discharge in cubic meters/second 16 m^3 /s

C_d Coefficient of discharge = 0.75

$\therefore 16 = 0.75\ A\ \sqrt{2\times 9.8\times 0.25}$

$\therefore A = 160/(0.75\times\sqrt{4.9}) = 9.64\ sq.m.$

Height of the vent 1. 75 m

<u>Length of Vent</u>

$9.64/1.75 = 5.5m.$

Instead of having one span of 5. 50 meters, it is better to adopt smaller spans both for economy of the top roadway and also for the convenience with which the smaller shutters can easily be operated So adopt two spans of 2. 75 meters each

From the above, it can be seen that the canal water way has considerably constricted The ratio of constriction is (5.5/15) i e nearly 37 per cent

Note

Any constriction of less than 60 to 50 per cent is considered too severe and not desirable as eddies are formed both upstream and downstream during flow and may cause considerable dynamic scours in rear.

To avoid this trouble, the sill of regulator is raised and length of vent correspondingly increased to restrict the percentage of constriction to not less than 50 per cent.

Therefore, assuming a linear waterway of 50 per cent, i e 7 50 m the height of vent way required would bebe9.647.5=1.3meters (i e the sill has to be raised by 1. 75 -1 .30 =0 45 meters above bed level, i e the sill of regulator has to be fixed at 20. 45 This will give 3 vents of 2. 50 meters long each, the height of vent being 1 .30 The rise in sill is to be limited to 0 4 of the upstream full supply depth

Vent way arrived at by using the sluice discharge formula above, is found to give excessive waterway Based on model studies, the Central Water and Power Commission recommends the use of the following relationship

$$Q= CB_tD^{3/2}$$

where

C is a coefficient depending upon the drowning ratio (upstream and downstream of regulator)

B_t Clear throat width between abutments

D Depth of crest below upstream total energy line

FIXING THE VENTWAY BY THE DROWNING RATIO METHOD

<u>Downstream of regulator</u>

Discharge = 16 cubic meters/second

Bed width = 15 meters

F S depth = 1. 75 meters

Considering side slopes 0 .5 H/V

Area of waterway 15 +(1. 75 /2 × 1 .75) = 27 .79 sq meters

Velocity developing in the canal = 0. 57 m/sec

Bed level = 20. 00

Elevation of total energy line = 20 + 1. 75 (0.57^2/(2×9.80)) = 21. 77

∴Depth of submergence over sill = 21. 77 - 20. 45 = 1. 32 m

Drowning ratio

(1.32/1.57) x 100= 84

Corresponding value of C 1 .58 (from table)

Bt=16/ (1.58×1.57)$^{3/2}$=5.146m

Including end contractions, provide 6.00 m waterway

In this case, adopt a water way of 6.00 meters making it as 3 vents of 2.00 meters each with the sill of the regulator kept at canal bed level only

ROADWAY

The roadway consists of a clear width of 3.65 meters 12 feet clear) between kerbs, each of which will be 23 cms 9 inches) wide It will be a through R C slab directly resting over the piers and abutments The slab will be continuous over piers and adopting I R C ..‘ class loading, single lane of traffic, a slab thickness of 20 cms will be more than enough Detailed design of road slabs is not attempted here

The bottom of the road slab is kept one meter above the upstream side F S L i e at level 23. 00 Top level of the road slab with a 7.5 cms, thick wearing coat will be 23.275 or 23. 28

On either side of the roadway, steel hand rails as shown in figure may be provided.

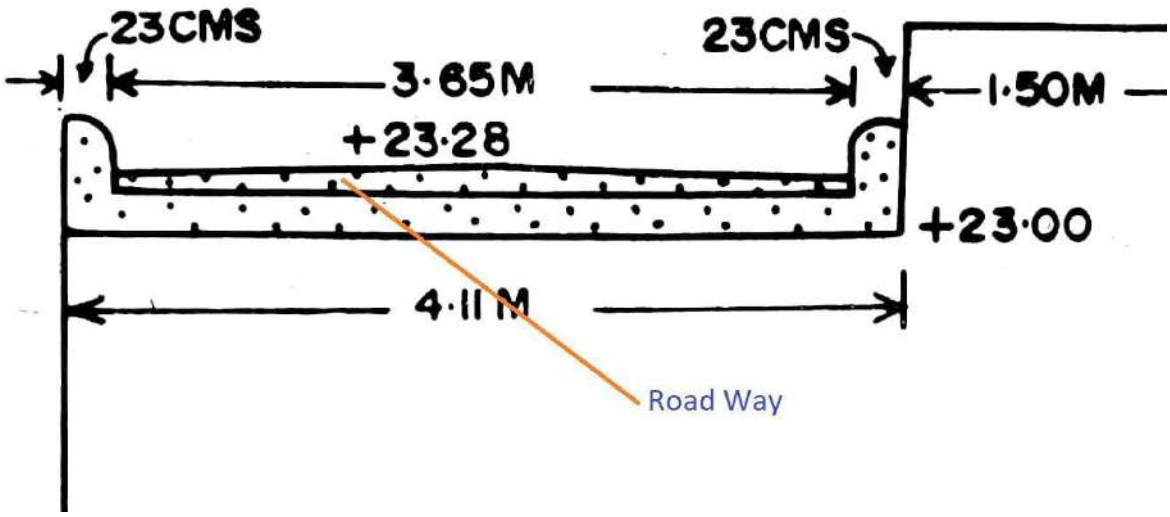

LENGTH OF PIER

Maximum length of pier will be to cover the roadway with its kerbs, with additional length for the shutter operating platform

Assuming 1. 50 meters as the width required for the shutter operating platform, the length of pier required (omitting the cut waters) is 3. 65 + 2 x 0 23 +1.50 = 5 61 meters

The top of pier under the road slab is at a level of + 23. 00

The top of pier under the shutter operating platform will be higher and this depends upon the height of shutter to be used.

Shutters

The dimensions of the vent way are 2. 00 and 1. 75 meters

Downstream F S depth is 1. 75 meters whereas the upstream F S depth is 2. 00 meters the shutter top is to be at least 30 cms above the upstream F S L. Assuming that the shutter rests in a 7.5 cms deep groove in the sill, the total height of shutter is to be 2.00 +0.30 + 0.08 i.e 2.38 meters

If a single shutter is provided, when a ventway is to be clearly opened, the bottom of shutter will have to be lifted clear over the upstream F S L Assuming that the bottom of shutter is lifted say 25 cms, above the upstream F S L the top of shutter will be at a level of 22.00+ 2.38+ 0.25 i.e 24.63

Assuming a clearance of 30 cms above the shutter to the bottom of the hoisting platform, the pier has to be raised to a level of 24.63+ 0.30 = 24.93 i e this portion of the pier will be 1.65 meters above road level This will look awkward This difficulty can be obviated to some extent by adopting a two-tier shutter, bottom shutter being 1.38 meters high and the top shutter being 1.25 meters with 25 cms as the overlap between the shutters They will be arranged in two grooves operating side by side.

The arrangement of shutters is shown in Figure Each shutter is operated separately by a hollow screw non rising stem type in an independent groove When the ventway is to be operated fully, both the shutters will be lifted clear above upstream F S L

In that contingency, the bottom tier requires more clearance than the top shutter and bottom of the operating platform will have to be at 22.00 + 0. 25 +1. 38= 23. 63 or say the top of pier for the portion need be at a level of 24.00 This is very reasonable and can be adopted

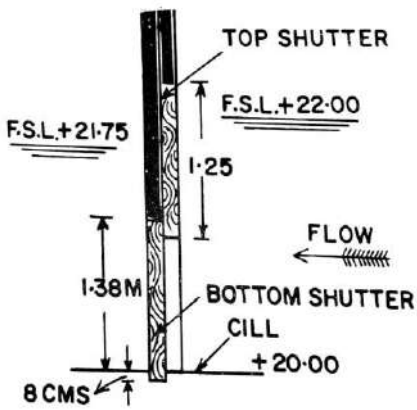

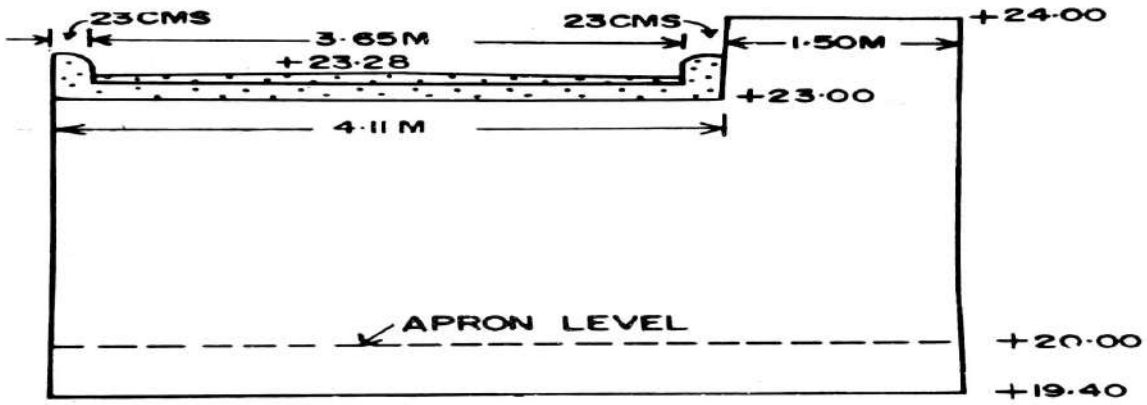

The stability of pier is now checked for these levels

Hard ground is available at 19. 00

Assuming a thickness of 60 cms for the apron, the top of foundations for piers and abutments can be fixed at 19. 40

The bottom of foundations will be at 18. 80

Thickness of pier is 1. 00 meter

The load taken by the pier will be for a length of 2. 00 + 1. 00 = 3 meters of lineal roadway.

Weight of road slab 3 0000×4 1111×20100×2400 = 5918 kg

Kerbs 22×3.00×23/100×30/100×2400 =994kg.

Wearing coat 3. 0000×3. 6565× ((5+7.5)/ 2×100) ×2400 = 1643 kg

Total = 8555 kg

Weight of pier under the road portion 4.11 ×1. 00×3. 66×2100 = 31072 kg

Weight of the pier under the operating platform =1. 50×1. 00×4. 60×2100 =14490 kg

Water thrust on the pier (horizontal thrust) =1000× (2^2/2) ×3. 00 = 6000 kg

Taking moments of all forces about toe:

Description	**Force in kg.**		**Lever arm (meters)**	**Moment in kg.(meters)**
Vertical			Horizontal	
1. Weight of road slab	8555	-	2.05	17538
2. Weight of pier under the road	31072	-	2.05	63698
3. Weight of the pier under the	14490	-	4.86	70421

operating platform				
4. Horizontal thrust	-	6000	0.67	-4020
5. Total vertical force	54117		Net moment =147367	

Arm of resultant = (147637/54117) = 2. 73 meters

Eccentricity (5.61/2)- 2 .73 =0. 07 meters

Allowable eccentricity 5.61/6 = 0. 94 meters

Hence,

the resultant falls within middle third and no tension develops in masonry of pier and length of pier is quite enough

Maximum compressive stress at the toe,

= 54117/ 1.00×1000×5.61x 1 + 6×0.07/5.61 = 10 36 T $tonnessq.meter.$

This is within safe limits of masonry Hence the design is safe and the length of pier as proposed can be adopted

<u>Abutments</u>

The top level of abutment is 23.00 ,i e the bottom level of the R C slab of the roadway The bottom of foundation concrete is 18. 80 Adopting 60 cms thick foundation concrete the top of foundation concrete is 19.40 The height of abutment is thus+ 23.00 -19.40 = 3.60 m

The abutment will have its front face vertical to facilitate the working of the regulator shutters in the vertical grooves, inserted in the front face of the abutment The abutment carries a vertical load, being that due to dead and live loads transmitted by the road slab

Keep the top width of abutment as 1.00 meter out of which 50 cms will be bearing for the R C slab The bottom width may be kept at 2.00 meters.

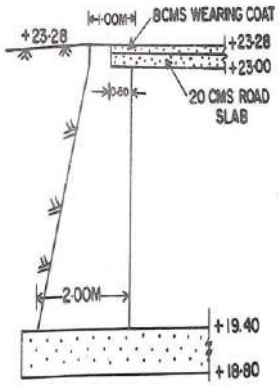

The wing walls both on the upstream and downstream side of the regulator will be of

the sloping type, sloping from 23.28 i e junction with abutment to 23.00 (i e top of bank level on the upstream side and

22.75 on the downstream side Top of wall 23.28 Top width 50 cms

Top of foundation concrete 19.40

Height of wall 3.88 meters

Bottom width 0.4 % H = 1.55 ≈ 1.60 m

Adopt a section as shown in Figure

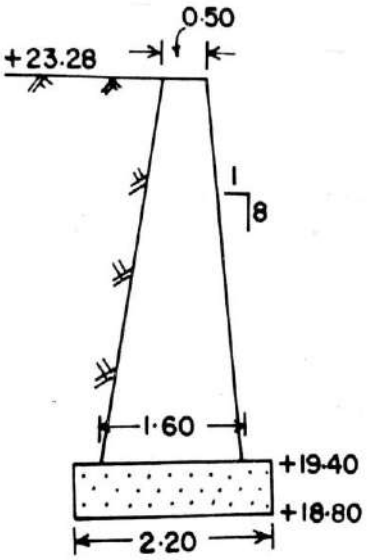

<u>Section of Level Wing and Return</u>

The top level of level wings and returns on both sides will be at the respective T B Ls on either side Since the difference in levels of T B Ls on either side is only 25 cms, the same section will be adopted on either side except that the top level of level wing and return on the downstream side will be kept at 22.75 and top level 23.00 top width 50 cms, top of foundation concrete 19.40 for the upstream side

Height of wall = 3. 60 meters

Adopt the section shown in Figure

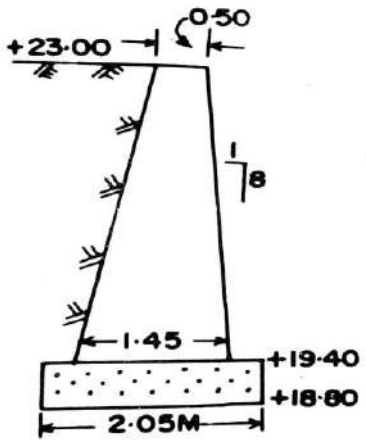

Splay of wings on both sides

This depends on the length of solid aprons provided on both sides of the regulator. The canal bed width is 15 meters at the end of solid aprons, the distance between masonry returns will be kept at 15 meters.

Solid Aprons for the Regulator

Solid aprons are required to prevent seepage when the regulator is closed with canal at F S L on the upstream side and no water on the downstream. This solid apron will be laid with its top level at the canal bed level

Assuming the bed material of the canal as sandy and also the hydraulic gradient in that soil asas1/10 we require 10 x 2. 20 meters length of apron, as the head of flow is 2 meters

These 20 meters of floor is provided as 6. 00 meters on the upstream side, 5. 6 meters under the regulator and the balance downstream. The maximum uplift is experienced just downstream of shutter.

Assuming that the shutters are located in the centre of the operating platform, the head lost in creep by the time the seepage reaches the shutter 6+(1.5/2) = 6. 75 meters

Head loss creep = 6.75/ 10 =0. 675 meters

Residual uplift 2- 0. 675 =1. 325 meters

Assuming that the tail water is at the downstream bed level the thickness of apron required

1.325/ 1.25 = 1. 06 meters or say 1 00 meters

This can be gradually reduced to 60 cms thick at the end of the apron. The upstream apron never experiences any uplift

So, the thickness of apron can be nominal and can be limited to 30 cms. Aprons can be in mass concrete.

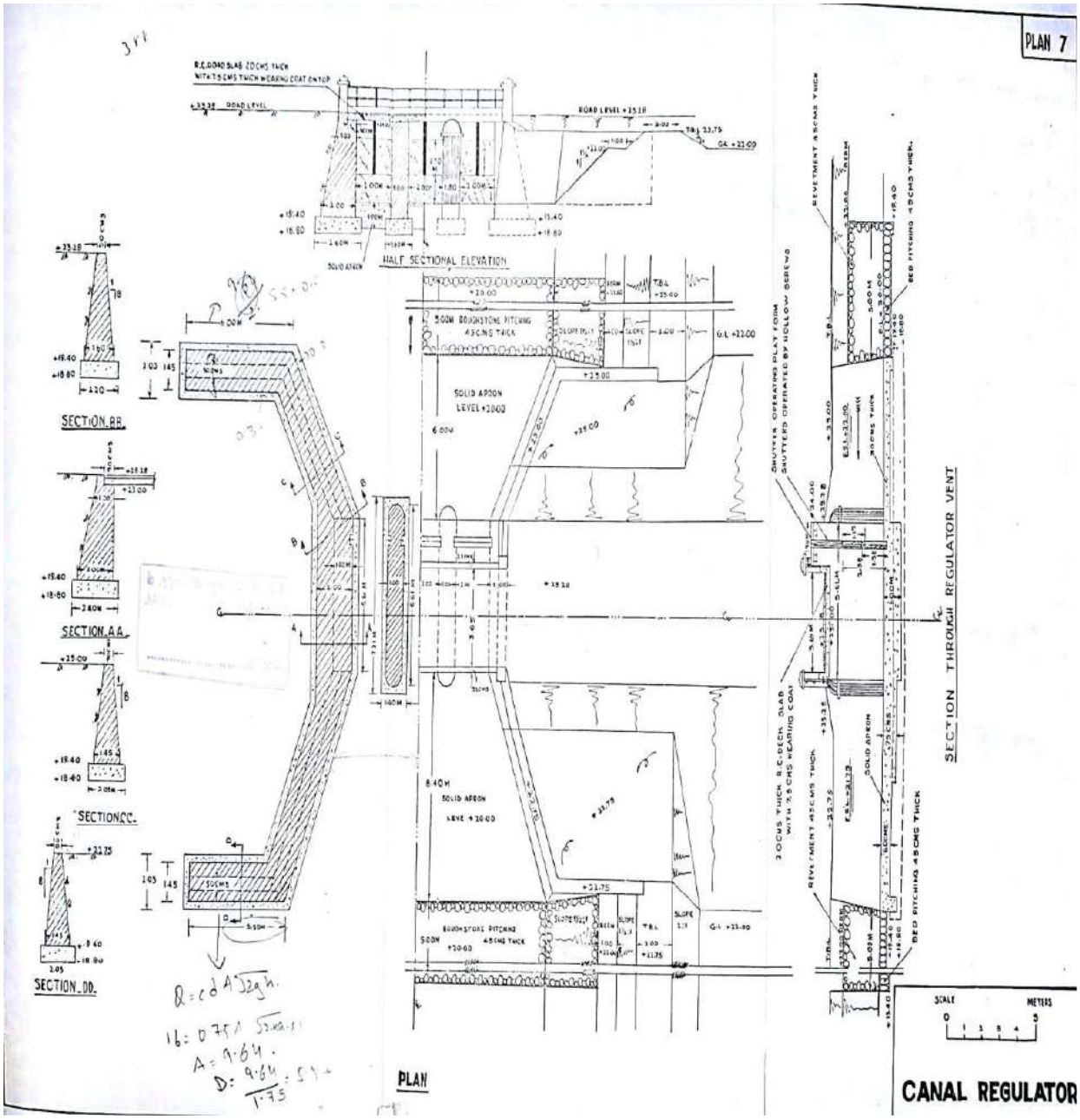
PLAN 7
HALF SECTIONAL ELEVATION
SECTION AA
SECTION BB
SECTION CC
SECTION DD
PLAN
SECTION THROUGH REGULATOR VENT
CANAL REGULATOR
SCALE
METERS

VIVA VOCE QUESTION

1. The discharge value of water is controlled by?
   The discharge value of water has to be adjusted to any value necessary to distribute the water effectively. This is done with the help of regulators.
2. How many main functions of a head regulator are?
   The main functions of a head regulator are to control and regulate the water entering the off take channel, to serve as a meter for measuring discharge, and to control silt entering into the off take channel.
3. How many numbers of conditions of flow are to be followed while designing the cross regulator and head regulator?
   The conditions are considered for the worst conditions of the flow. The flow of the canal should be taken as it is when there is full supply of discharge down the channel with all gates of both head and cross regulators fully open. The discharge in the main channel is low but in the off-take channel is running full, the FSL is maintained by partial opening of the gates of cross regulator.
4. By what structures the regulator can control the supplies entering the off take channel?
   The regulator consists of essential parts like piers which are placed across the canal at regular intervals with grooves, in which either planks or gates can be used to control the supplies entering off take channel.
5. How to Maintain Proper Energy Dissipation?
   The transitions from the main channel to the off taking channel have to be designed properly so as to avoid the accumulation of silt or say silt jetty. So therefore to serve as an alternative to the transitions both the channels have to make an angle with the parent channel upstream of the off take.
6. How many types of canal irrigation works are there?
   There are five types of canal irrigation works, namely canal falls, canal regulators, canal escapes, metering flumes, and canal outlets and modules.
7. The process of distribution of water from main canal to branches is termed as canal regulation.
   The water enters the main canal from the river and this water has to be divided into different branches, distributaries in accordance to the relative demand on these different channels.

EX NO: 9 **DESIGN OF CANAL DROP**

Design a canal drop of 2 meters with the following data

Hydraulic Particulars of The Canal	**Above Drop**	**Below Drop**
Full supply discharge	4 m3/s	4 m3/s
Bed width	6.00 m	6.00 m
Bed level	+10.00	+8.00
Full supply depth	1.50 m	1.50 m
F.S.L	+11.50	+9.50
Top of bank 2 m wide at level	+12.50	+10.50
Half supply depth	1.00 m.	

Good soil is available for foundations at +8.50.

Components to be Designed

1. Trapezoidal Notch (Dimensions of The Notch)
2. Length of Drop Wall Between Abutments
3. Profile of Drop Wall
4. The Length of Horizontal Floor of The Cushion
5. Notches and The Notch Pier
6. Design of Protective Works

Trapezoidal Notch

Assume 2 notches.

Discharge through each notch = 4/2 = 2 cubic meters/second

The discharge through a trapezoidal notch = $Q_{Rec} + Q_{Tri}$

Q = 2/3 LC d $\sqrt{2gh^{3/2}}$+ 8/15 Cd Tan $\boldsymbol{\theta}/2)\sqrt{2gh5/2}$

Assume Cd = 0.7 For full Supply Discharge Q = 2 m^3/s

h = 1.5 m

2 = 2/3 x L×0.7 $\sqrt{2}\times 9.81\times 1.5^{3/2}$+ 8/15 ×0.70×Tan ($\boldsymbol{\theta}/2)\sqrt{2}\times 9.811.5^{5/2}$

For Half Supply Discharge Q = 1 m^3 /s

h = 1.0 m

1 = 2/3xL×0.7 $\sqrt{2}\times 9.81\times 1.03/2$+ 8/15 15×0.70.7×Tan ($\boldsymbol{\theta}/2)\sqrt{2}\times 9.81X1.05/2$

By solving above Two Equation We will get L = 0.4 m and $\boldsymbol{\theta}$= 5 º 45'

The width of notch at sill +10.00 = 40cms

The width of notch at F S L.i.e ., at +11.50 = (0.40 + 1.5 x 2 x tan 5˚45’) = 0.70 meter

or 70 cms

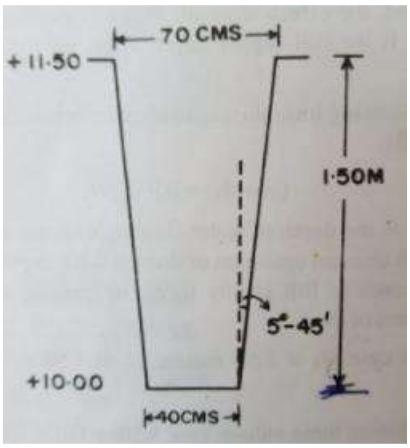

2. Length of Drop Wall Between Abutments

The length of drop wall = 7/8 x u/s bed width = 7/8 x 6 = 5.25 m

3.Profile of Drop Wall

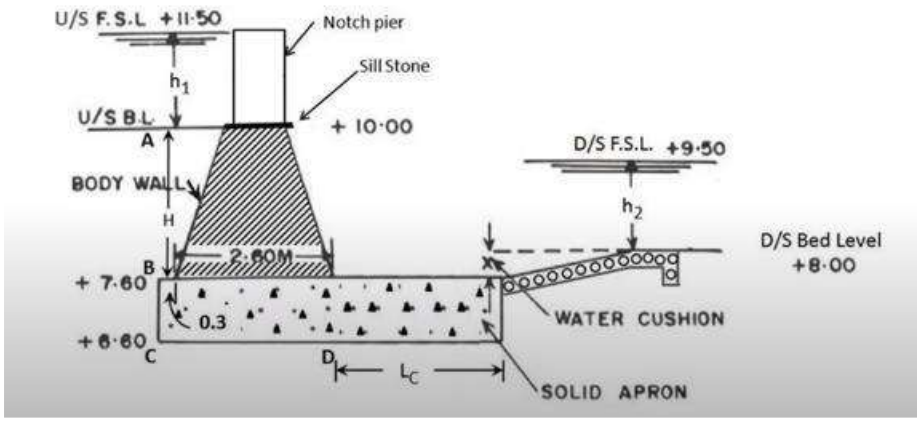

Top thickness of drop wall

= $h_1/2$ + (15 to 30 cms)

= 1.5/2 + 0.15 = 0.9 m (adopt 1 m)

The height of drop wall depends upon the depth of water cushion that is to be allowed in rear. Depth of water cushion can be calculated based on the following formula.

$(X+h_2) = 0.9 \times h_1 \times \sqrt{h}$

X = Depth of water cushion

h_1 = U/s full supply depth = 1.5 m

h_2 = D/s full supply depth = 1.5 m

h = head causing flow = U/s FSL

D/s FSL = 11.50 9.50 = 2 m

X = 0.4 m = 40 cms

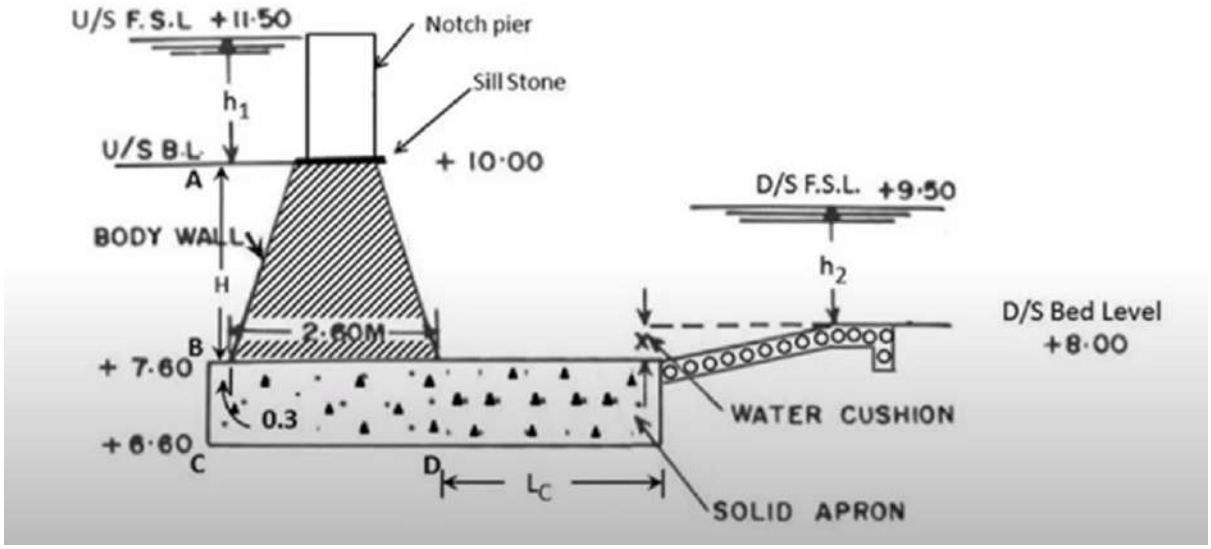

Hence water cushion may be kept 40 cms below the D/s bed level of channel.

D/s bed level of channel = +8.00

Top level of solid apron = 8.00 - 0.40 = +7.60

Top level or sill level of drop wall = +10.00

Bottom level of drop wall = +7.60

Height of drop wall = 10.00- 7.60 = 2.40 m

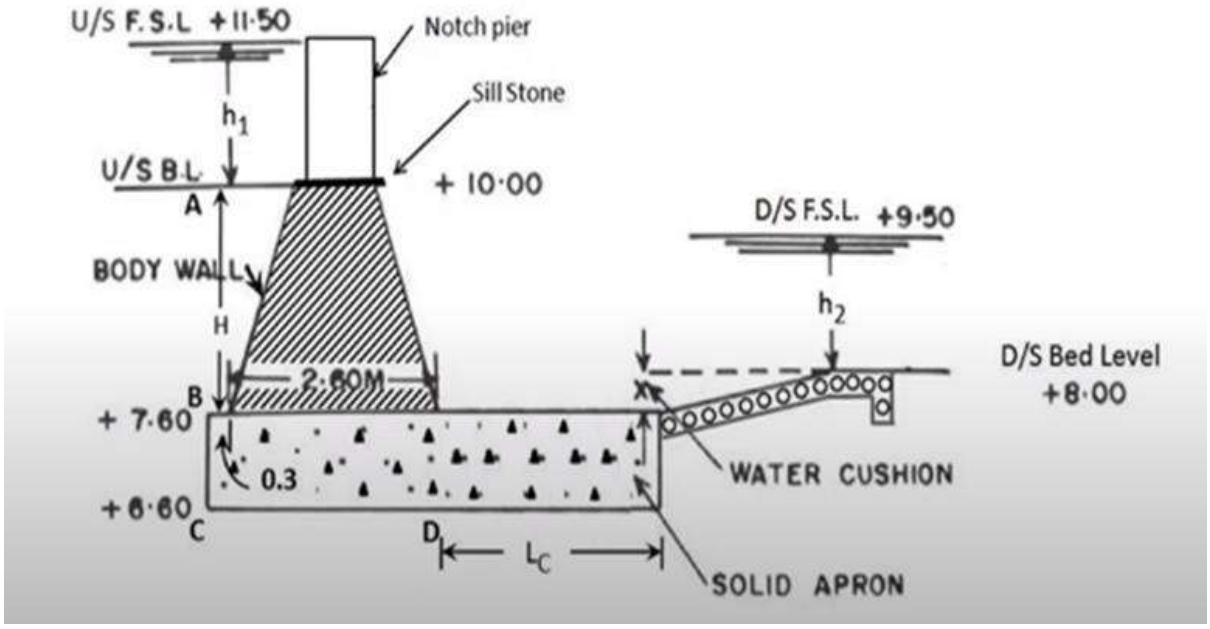

Base width of the drop wall

This can be calculated based on the following formula

B = $\boldsymbol{H}+\boldsymbol{h_1}/\sqrt{\rho}$

Where

H = height of the drop wall = 2.40 m

h_1 = water flowing depth = 1.50 m

ρ= masonry density = 2.25

B = bottom width of the drop wall = 2.60 m

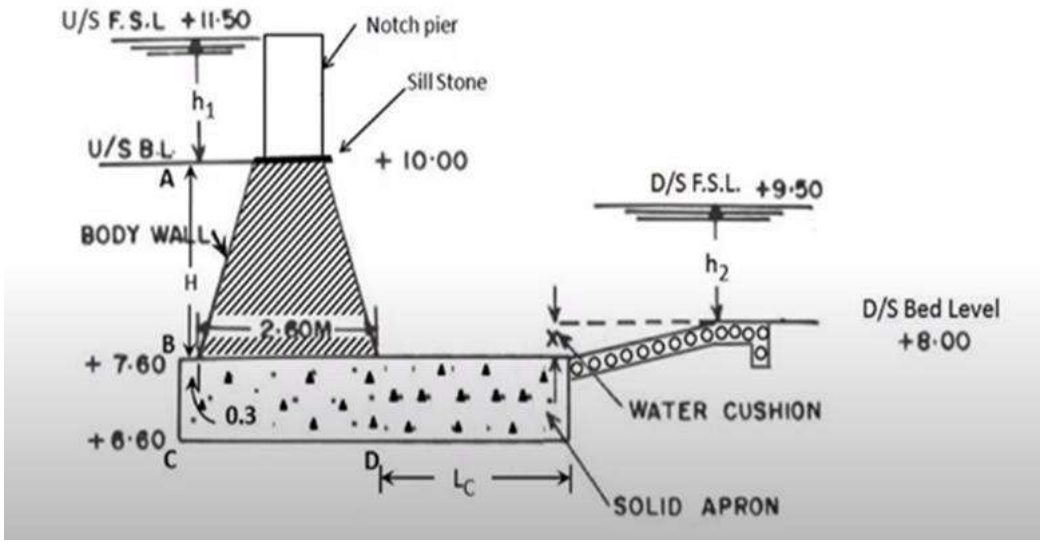

Design of horizontal floor of the cushion

1) Length

Length of solid apron from the toe of the drop wall

Maximum length =

$2h_1+2\sqrt{h_1h_2}\times1.50+2\sqrt{1.5\times2.0}= 6.46$ m

Minimum length =

$1.50+2\sqrt{h_1h}= 1.50+2\sqrt{1.5\times2.0}= 4.96$ m

Adopt length of solid apron = 5.0 m

2) Thickness

The thickness of the solid apron should be sufficient to resist the uplift

The uplift is maximum at the toe of the body wall (i.e at point D) when the canal is running full

Head causing flow=11.5-9.5=2.0m

Assuming thickness of the apron 1m

And hydraulic gradient of 1in4.

Length of the creep upto point D

=AB+BC+CD=2.4+1.0+0.3+2.6=6.30

Head lost between A&D=6.3/4=1.6m

Residual head at point D(h_D)=2–1.6=0.4m

Thickness required at point D=h_D/(G–1) =0.4/ (2.25–1) =0.35m

But minimum thickness is usually provided to with stand the impact of the falling water=$0.5\sqrt{h_1+d}=0.5\sqrt{1.5+2.0} = 0.94m$

However, provide 1mt hick of concrete.

Notches & Notch Pier

The sills of the notches = U/S bed level of canal

Two notches are arranged in the notch Pier over the body wall.

Top of the notch pier = U/S F.S.L = 11.50

Width of the notch = (h_1 /2) = 1.5/2 = 0.75 m. but in this case 0.85 m provided

This type of arrangements reduces the eddies around the body wall.

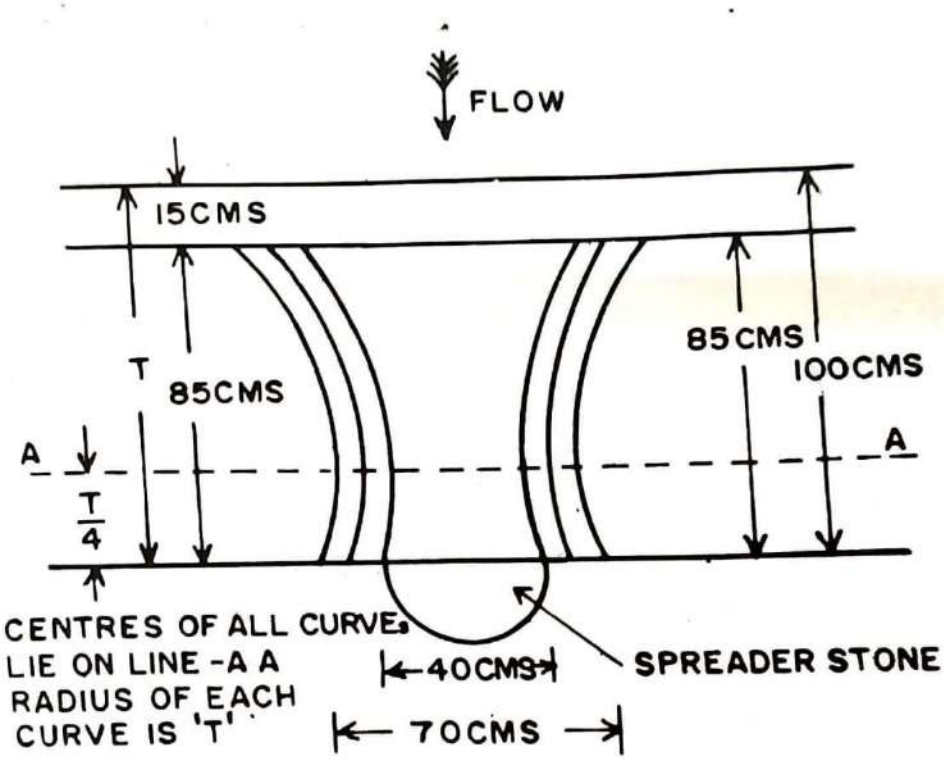

PLAN OF NOTCH IN DROP WALL

CS Scanned with CamScanner

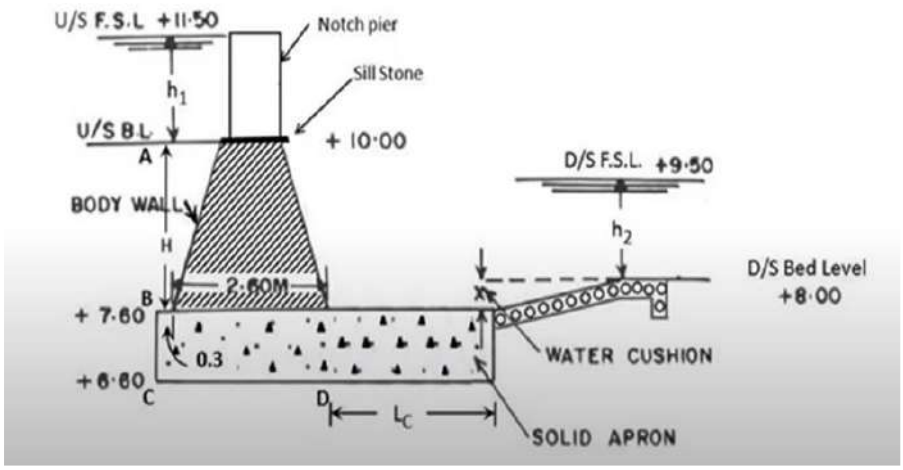

Protective works

Abutment (BC)

Length of the abutment = base width of the drop wall = 2.6 m

Top width of the abutment = 0.5 m

Top level of the abutment = T.B.L of U/S canal = +12.50

Bottom level of the abutment = foundation of the drop wall = +7.60

Height of the abutment = 12.50-7.60 = 4.90 m

Base width of the abutment = 0.4 ×4.90=1.96≈2.0m

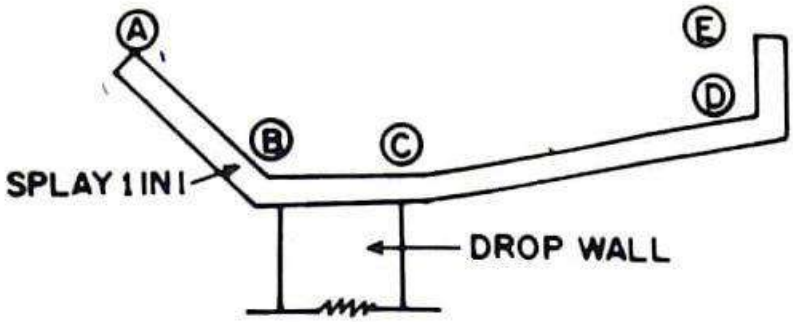

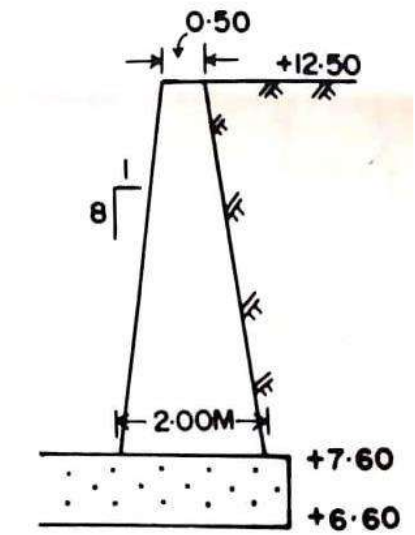

SECTION OF ABUTMENT BC

U/S wing wall(AB)

Providing a splay 1 in 1

Top width = 0.50 m

Top level = T.B.L of U/S canal = +12.50

Bottom level = good soil for foundation = +8.50

Height of wing wall = 12.50 - 8.50 = 4.0 m

Bottom width = 0.4 ×4=1.60m

Provide a foundation concrete of 60 cm thick

Provide a front batter of 1 in 8

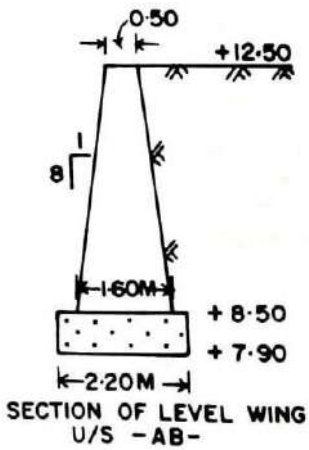

D/S wing wall (CD)

It is sloping from C to D

Section at C = section of abutment

But foundation concrete is 60 cm thick

Section at D

Top width = 0.50 m

Top level = T.B.L of D/S canal = +10.50

Bottom level = the top of water cushion = +7.60

Height of wing wall = 10.50 –7.60 = 2.90 m

Bottom width = 0.4 ×2.9=1.16m≈1.20 m

Provide a foundation concrete of 60 cm thick

D/S return (DE)

It is a level return wall

Section at E = Section at D

U/S revetment and apron

Length of the revetment = 3h1or min of 3 m = 3 ×1.5=4.50m

Length of the revetment = 4.50 m from the drop wall towards the U/S

Length of the apron = 0.5 ×Length of the revetment = 0.5×4.50 = 2.25 m

D/S revetment and apron

Length of the revetment = 4(h1+d) or min of 6 m = 4(1.5+2) =14m

Length of the revetment = 14 m from the end of the cistern

Length of the apron = 0.5 ×Length of the revetment = 0.5×14= 7.00 m

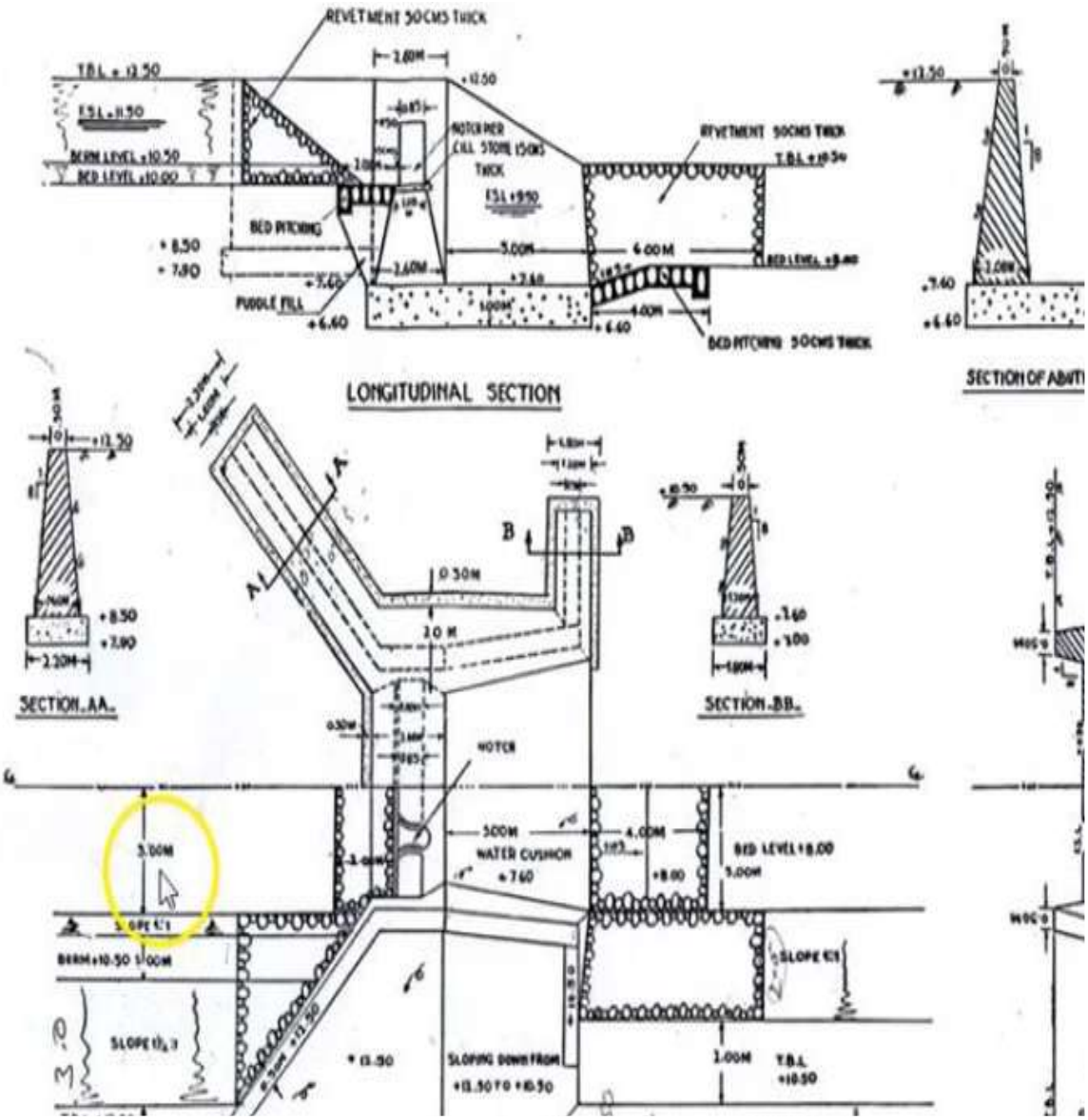
REVETMENT 50CMS THICK
T.B.L. +12.50
F.S.L. +11.50
BERM LEVEL +10.50
BED LEVEL +10.00
NOTCH PIER
CILL STONE 150CMS
THICK
REVETMENT 50CMS THICK
BED PITCHING
PUDDLE FILL
BED PITCHING 50CMS THICK
LONGITUDINAL SECTION
SECTION OF ABUT
SECTION AA
SECTION BB
NOTCH
WATER CUSHION
BED LEVEL +8.00
SLOPE 1:1
SLOPING DOWN FROM
+12.50 TO +10.50
T.B.L.
+10.50

VIVA VOCE QUESTION

1. On what term does the construction of a fall in the case of the main canal depend?
   The main does not irrigate any area directly, so therefore the site of the fall is based on the considerations of economy in cost of excavation and filling versus cost of fall. The excavation and filling on both sides of the fall should be balanced because unbalanced work causes extra cost.
2. On what factor in case of branch canals, the construction site for a fall depends?
   By considering the commanded area of a branch canal or a distributary canal the location for the falls is decided. The procedure is to fix the FSL needed at the head of the off taking channels and outlets. Thus, the FSL can be marked at all commanded points and hence deciding appropriate locations for the falls in canal FSL and therefore in canal beds.
3. Define Simple Vertical Drop Fall.
   The diagram gives clear image that in this fall a high crested fall takes place into the water cushion below. There is no clear hydraulic jump or energy dissipation, as the velocity jet enters the deep pool of downstream. Hence it is a simple vertical drop type fall.
4. In which fall the depth discharge relationship is unaffected?
   In this fall the notches could be designed to maintain the normal water depth in the upstream channel at any two discharges, as the intermediate values do not vary much. Therefore, the depth discharge relationship of the channel is not affected by the introduction of the fall.
5. Which type of fall is suitable for 60 cumecs discharge and 1.5 m drop?
   In this type of modern fall, a straight glacis is provided after the raised crest. The hydraulic jump is made to happen on this glacis causing sufficient energy dissipation. If not flumed this fall gives good performance. This fall is suitable for 60 cumecs discharge and 1.5 m drop.
6. What is the reason for the construction of baffle wall in baffle fall?
   The baffle wall is provided at a calculated height and a calculated distance from the toe of the glacis to ensure proper formation of the jump on the baffle platform. This type of fall is suitable for all discharges and for drops which are more than 1.5 m.
7. Which type of fall is not adopted in India?
   In this type of fall the energy dissipation is incomplete on a straight glacis due to the vertical component of velocity remains unaffected. So, therefore due to this reason the straight glacis is replaced by a parabolic curve known as Montague profile. This curved glacis is difficult to construct and therefore is costlier. Hence it is not adopted in India.