SRM VALLIAMMAI ENGINEERING COLLEGE

(An Autonomous Institution)

S.R.M. Nagar, Kattankulathur - 603 203.

DEPARTMENT OF AGRICULTURAL ENGINEERING

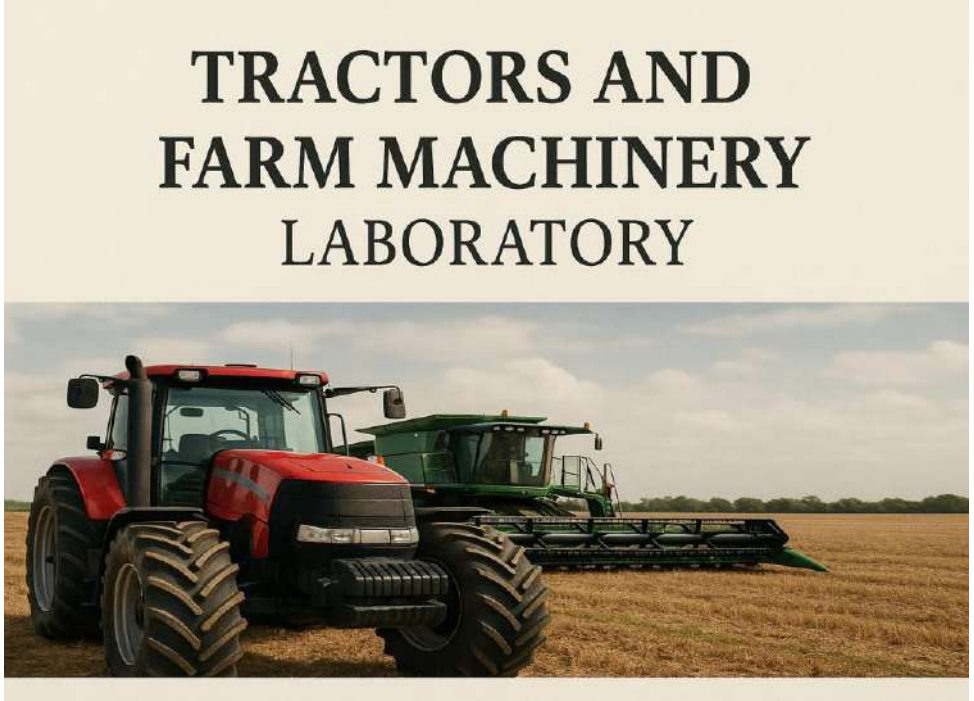

AG3566 - TRACTORS AND FARM MACHINERY LABORATORY

(REGULATION 2023)

2026 - 2027

LABORATORY MANUAL

Prepared By,
Ms.Dhivya P, Assistant Professor/Agricultural Engineering

AG3566	TRACTORS AND FARM MACHINERY LABORATORY	L	T	P	C
		0	0	3	1.5

OBJECTIVES:

- To make the students conversant with the anatomy of farm tractor and farm engines.
- To make them understand the working principle of IC engines, clutch, gear box, differential and final drive.
- The students will be introduced to the practice of different farm machinery in the field on tillage, sowing, plant protection, harvesting and threshing.
- To know the adjustments of farm machines, dismantling and reassembling of a disc harrow, seed-cum fertilizer drill and sprayer.
- To recognize the working principle of various machines used in field.

LIST OF EXPERIMENTS:

1. Identification of major systems of a tractor and general guidelines on preliminary check measures - procedure for starting, running and stopping.
2. Study of electrical system, instruments in the dash board and controls – components: dynamo, starting motor, battery, lights, horn, odometer, ampere meter, accelerator, brake, differential lock, PTO lever, hydraulic lever, draft and position control lever.
3. Identification of components of power tiller, their maintenance and study on preliminary check measures and safety aspects - procedure for starting, running and stopping.
4. Identification and study of different components of diesel engine.
5. Identification and study of different components of petrol engine.
6. Field operation and adjustments of ploughs.
7. Field operation and adjustments of harrows.
8. Field operation and adjustments of cultivators.
9. Field operation of sowing and planting equipment and their adjustments.
10. Field operation of plant protection equipment.
11. Field operation on mowers.
12. Field operation of combine and determination of field losses.

TOTAL: 30 PERIODS

LIST OF EQUIPMENTS REQUIRED:

1. Tractor – 1no.
2. Power tiller – 1no.
3. Disc plough – 1no.
4. Disc harrow – 1no.
5. Multi type cultivator – 1no.
6. Paddy Transplanter – 1no.
7. Seed drill – 1no.
8. Sprayer – 1no.
9. Mower – 1no.
10. Weeder -1no.
11. Combine harvester -1 no. (optional) – can be had as demonstration.

COURSE OUTCOMES:

At the end of the course, the student should be able:

1. Understand the working of tractors, power tillers and their functions.
2. Identify and rectify problems in the functioning of tractors and power tillers.
3. Summarize the ergonomics of tractors and power tillers.
4. Hands on experience in field operation of ploughs, harrows, cultivators.
5. Determination of field loss and adjustment of till and disc angles.

TEXT BOOKS:

1. Jagdishwar Sahay. 2019. Elements of Agricultural Engineering. Standard Publishers Distributors, Delhi.
2. Michael, A.M. and Ohja, T.P. 2018. Principles of Agricultural Engineering Volume I. Jain Brothers, Jodhpur.
3. Jain, S.C. and C.R. Rai. Farm tractor maintenance and repair. Standard publishers and distributors, New Delhi, 1999.

REFERENCE BOOKS:

1. John A Havers and Frank W Stubbs, “Hand book of Heavy Construction”, McGraw – Hill book Company, New York, 1971.
2. Barger, E.L., J.B. Liljedahl and E.C. McKibben, “Tractors and their Power Units”, Wiley Eastern Pvt. Ltd., New Delhi, 1997.
3. Domkundwar A.V. A course in internal combustion engines. Dhanpat Rai & Co. (P) Ltd., Educational and Technical Publishers, Delhi,1999.

AG3566	**PO**												**PSO**			
	1	**2**	**3**	**4**	**5**	**6**	**7**	**8**	**9**	**10**	**11**	**12**	**1**	**2**	**3**	**4**
CO1	2	2	1	1	2	-	-	-	1	-	2	1	2	1	1	3
CO2	1	-	2	1	2	-	-	-	1	-	1	1	1	1	2	1
CO3	2	1	1	-	1	1	-	1	1	-	1	-	1	2	3	2
CO4	2	1	2	1	-	-	1	-	-	-	1	-	1	2	3	1
CO5	3	2	2	1	1	-	2	-	2	-	1	1	1	2	2	3

V SEMESTER

INDEX

Ex. No.	Date	Title of the Experiment	Page No.	Completed Date	Teacher's Initials	Mark
CYCLE I						
1.		Identification of major systems of a tractor and general guidelines on preliminary check measures - procedure for starting, running and stopping.				
2.		Study of electrical system, instruments in the dash board and controls – components: dynamo, starting motor, battery, lights, horn, odometer, ampere meter, accelerator, brake, differential lock, PTO lever, hydraulic lever, draft and position control lever.				
3.		Identification of components of power tiller, their maintenance and study on preliminary check measures and safety aspects - procedure for starting, running and stopping.				
4.		Identification and study of different components of diesel engine.				
5.		Identification and study of different components of petrol engine.				
6.		Field operation and adjustments of ploughs.				
CYCLE II						
7.		Field operation and adjustments of harrows.				
8.		Field operation and adjustments of cultivators.				
9.		Field operation of sowing and planting equipment and their adjustments.				
10.		Field operation of plant protection equipment.				
11.		Field operation on mowers.				
12.		Field operation of combine and determination of field losses.				

Ex.No.1 **Date:----------**

IDENTIFICATION OF MAJOR SYSTEMS OF A TRACTOR AND GENERAL GUIDELINES ON PRELIMINARY CHECK MEASURES BEFORE STARTING A TRACTOR - PROCEDURE FOR STARTING, RUNNING AND STOPPING THE TRACTOR

Aim: To Identify and study major systems of a tractor and to learn general guidelines on preliminary check measures before starting a tractor - procedure for starting, running and stopping the tractor **Tractor components and functions**

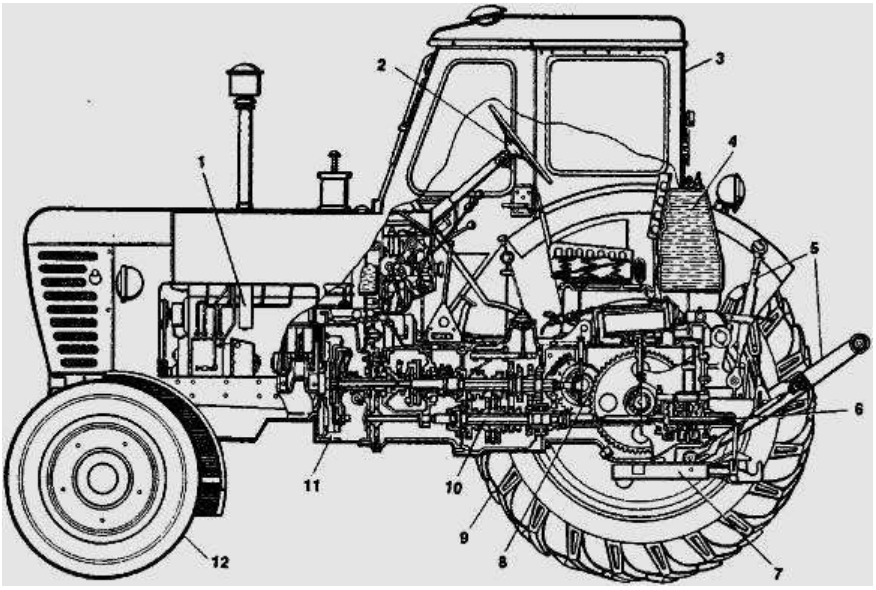

Figure 1. Wheel type tractor:

(1) engine, (2) steering wheel, (3) cab, (4) fuel tank, (5) levers of toolbar assembly. (6)power takeoff shaft, (7) hitch, (8) main drive, (9) driving wheel, (10) gear box, (11) clutch, (12) front (steerable) wheel

Engine- Engine converts heat energy obtained during burning of fuel into mechanical energy. The energy obtained from engine is used to i) move the tractor ii) to pull the implements and trailer iii) to operate rotary machines like rotary tiller, pumping devices etc.

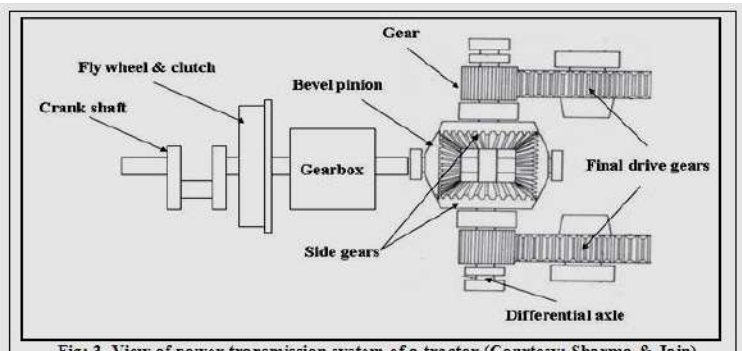

Fig: 3. View of power transmission system of a tractor (Courtesy: Sharma & Jain)

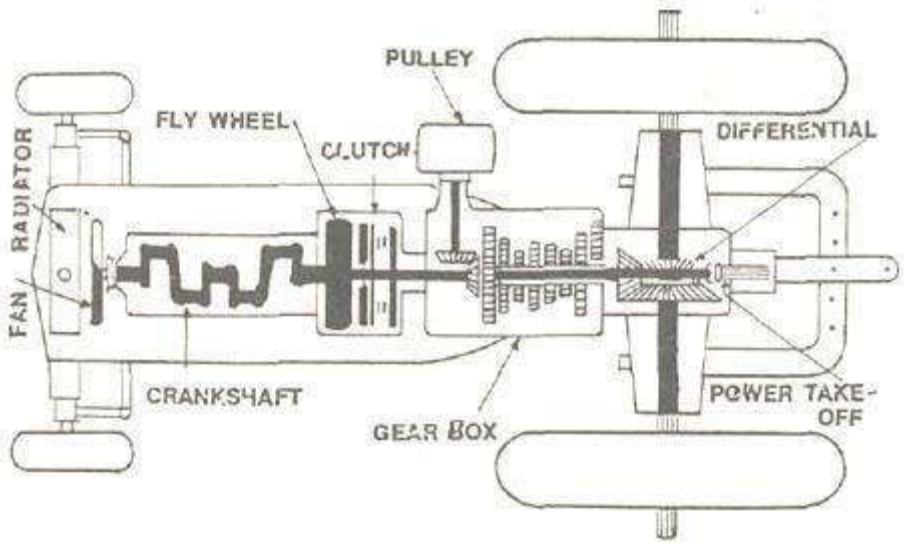

Clutch- It is used to connect or disconnect engine power to the gear box of the tractor.

Gear box- Gear box contains many pairs of gears to provide different speeds to the rear wheels. This system consists of components that are used to transmit the torque developed by the prime-mover or the engine to the driving wheels and to vary the torque and direction of rotation of the ground wheels. The greatest difference between transmission for farm tractors and those for highway vehicles is that in the tractor most of the gears may be used continuously under full load. Automobile transmissions would fail if they were run in low gear at full power for any length of time. All transmissions convert the engine torque and speed into a more useful combination of torque and speed at the drive wheels.

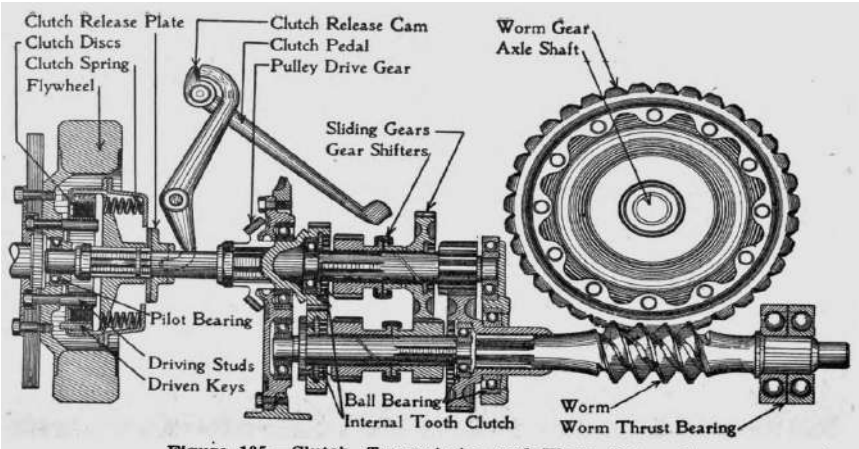

Figure 135.—Clutch, Transmission and Worm Drive of Tractor.

Differential unit- This is also an assembly of gears in a special way. It provides differential speeds to rear wheels during turning of the tractor

Final drive- This constitutes a pair of gears connecting the half shaft and the rear wheel axle so that the speed of the half shaft is very much reduced at the rear wheels and by this way the torque axle is increased

PTO shaft- Its full name is power take of shaft. It gets it drive from the gear box of the tractor. Rotating type of implements such as rotary tiller, water pumps, chaff cutter etc can be operated using the PTO shaft drive. It is available at the rear /side of the tractor. The power available at the PTO shaft is about 87 % of engine power.

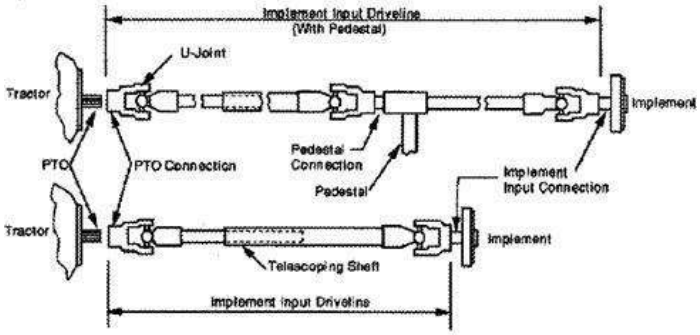

Figure 1. The major components of PTO systems

Draw bar- It is a bracket located to the rear of the tractor to which trailed implements and trailers can be connected and worked. The power available at the draw bar is about 50-60 % of engine power. Because the maximum speed of a tractor is regulated by a governor, the potential maximum drawbar power of the tractor is nearly constant regardless of the forward speed, except for the lowest speeds when the maximum power is limited by traction.

Hydraulic system- Hydraulic system operates the hydraulic cylinders which in turn actuate the lower links of the tractor so that the implements hitched to the lower links are lifted orlowered

Three point hitch system- The three links- one upper link and two lower links- available at the rear of the tractor constitute the three point hitch system for the tractor. The lower links are actuated by the hydraulic system . An implement connected to the three links is called a mounted implements and an implement connected to the two lower links is called semi mounted implement.

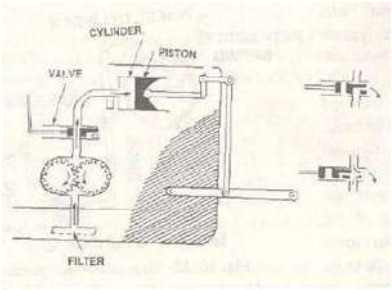

Schematic diagram of hydraulic system

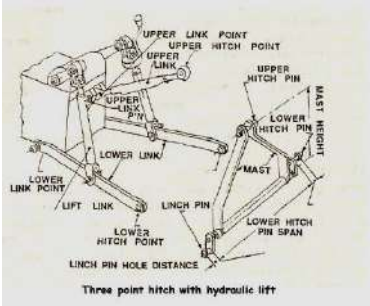

Three point hitch with hydraulic lift

Steering system-It is useful to turn the front wheels either right side or left side so that tractor turns right or left.

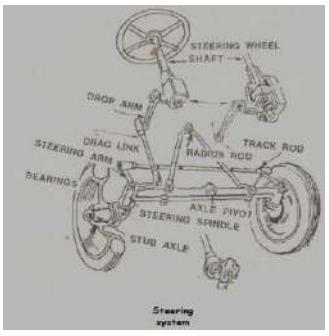

Steering system

Brakes- when brakes are applied , brake drums located in the rear wheel drums stops the rotating wheels and the tractor stops

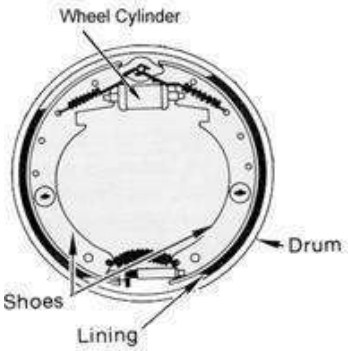

DRUM BRAKE

Cooling system- It cools the engine by removing heat with the help of water. It contains radiator, water pump, thermostat . Cool water is pumped into the water jackets of the engine, heat from engine body is transferred to water by conduction and the hot water is cooled in the radiator.

Lubricating system- All the moving parts in the engine are lubricated by lubricating oil. Lubrication is necessary to reduce wear and tear of the moving parts of the engine. This system consists of oil sump, lubricating oil, and pipe lines.

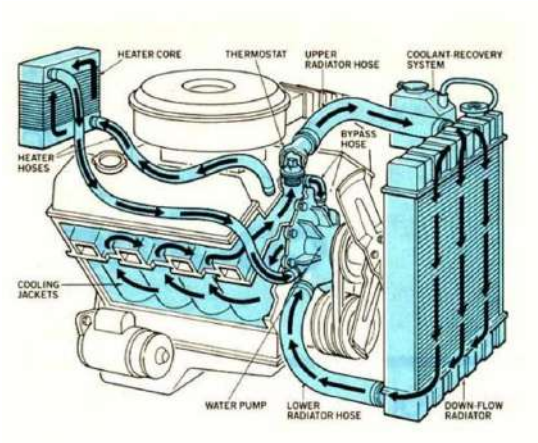

1 Parking brake pedal
2 Clutch pedal
3 Shuttle shift lever
4 Hydraulic flow control knob
5 Sub shift lever
6 WD shift lever
7 PTO shift lever
8 Tilt pedal (steering column)
9 Brake pedal
10 Acceleration pedal
11 Steering wheel
12 Diff-lock pedal 13 Throttle lever
14 Main shift lever
15 Position control Dial knob
16 Joy stick lever for hydraulics.

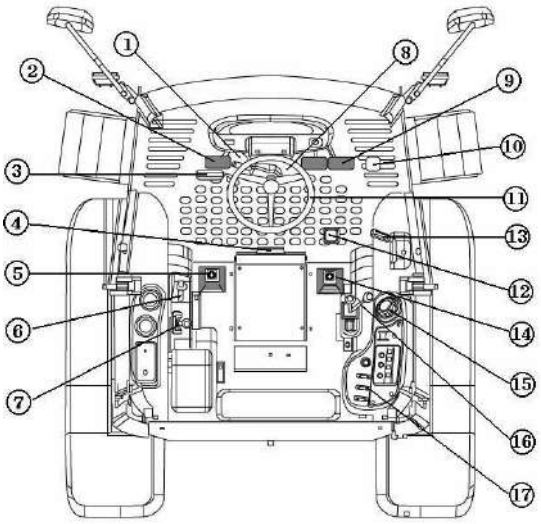

TRACTOR CONTROL

Control Meters / Panel:

Temperature gauge- It indicates the temperature of water in the radiator. When it reads with in green band, the engine is cooled properly. When it reads in the red band it means engine cooling in insufficient, may be due to defects in the cooling system components. This should be corrected.

Oil gauge- It indicates the pressure with which oil is circulated in the engine parts. High pressure indicates blockage in the oil line and to be checked for correctness.

Hour meter- It indicates the running hours of the engine

Speedometer- It indicates the vehicle speed in km/h

Ampere meter- It indicates the condition of the battery as well as charging of the battery by dynamo. All

the above meters are placed in the panel board located in front of the driver

Before Starting the Tractor:

1. Check engine oil level, fill upto the mark on the dipstick
2. Clean and refill air cleaner bowl to level mark on lip of the canister
3. See that radiator is filled with water
4. Every day after completion of the work, fill up the fuel tank, make sure no water gets into it
5. Do not attempt to start the engine other than from the driver‟s position
6. Ensure that the dual range selector is in the S‟‟S position and that the gear lever and PTO lever are both in their positions.
7. Check whether both brake pedals are locked together
8. Set the hand throttle lever half the way down
9. Ensure that the fuel cut-off control is pushed fully in
10. Turn the starter switch key clockwise to operate the starter
11. When the engine fires, release switch key which will run to the OFF position and push hand throttle lever position to a fast idle position

Running the Tractor:

1. Make sure the brakes are released
2. Depress clutch pedal fully and shift gear lever to the desired gear and dual range selector either high or low
3. Increase engine speed slowly and release clutch pedal slowly
4. Remove foot from clutch pedal and slowly increase throttle setting until desired speed is obtained
5. Check whether ammeter, fuel meter, temperature meter and engine speedometer are working

6. Do not rest foot on or ride the clutch pedal, as this may cause premature wear of the clutch 7. Do not change the dual range selector lever when the tractor is moving

Stopping the Tractor:

1. First press the clutch pedal for stopping the power transmission from the engine flywheel and simultaneously apply the brake pedal.
2. Bring the throttle lever to the minimum position 3. To stop the engine, pull the fuel cut-off control lever **Parking the Tractor or Tractor with Trailor:**
1. Always park the vehicle in the left side of the road
2. Do not park in neutral gear position
3. Engage the hand brake while parking

Safety Precaution

1. Do not shift speed unless the tractor comes to a full stop. Otherwise, it may damage the gear teeth.
2. Always move the main clutch lever to “stop” when shifting speed.
3. Use a low range speed in the 1st speed when traveling on narrow or slippery paths.
4. While traveling down a slope, do not disengage the main clutch, or use the “Neutral” position because accidents may occur.
5. The trailer that hitches to the tractor should sport a braking system

Driving instructions for driving the tractor on the road

1. Follow the procedure explained earlier and start the tractor.
2. Select the require gear say low first and move the tractor by following the procedure explained in the previous exercise.
3. While moving increase the throttle, decrease the throttle, depress the clutch and see what happens to the movement of the tractor.
4. After pertaining in low first gear try to run the tractor low second gear and feel the difference.
5. Then try to move the tractor in low third gear and observe the performance. While running the tractor practice in turning towards left side and right side. Practice in reversing the tractor. Always use low gear while reversing.
6. Follow the traffic and safety driving rules while operating the tractor on road.
7. While stopping and parking the tractor follow the procedure explained in the previous exercise.

Driving instructions for driving the tractor off the road

1. Before start check the inflation pressure required for operating the tractor in off road. Follow procedure as explained earlier.

2. At each gear positions notice the difference between the tractor running on road and off the road and record your observations.

3. Do you feel any difference in the operator convenience during driving in on road and off road?

4. Apply the brake when both the brake pedals are locked together.

5. Release the brake pedal lock lever and apply the brake pedals individually and record what happens.

6. Turn the tractor left or right, with and without loading the brake pedals and measure the minimum turning radius.

Practical Exercise: 1

i. Identify the major components of tractor.

ii. Write the Tractor driving procedures to be followed on-road and off-road.

iii. List out the preliminary check measures before starting a tractor - procedure for starting, running and stopping the tractor.

Ex.No.2 Date:----------

STUDY OF ELECTRICAL SYSTEM, INSTRUMENTS IN THE DASH BOARD AND CONTROLS – COMPONENTS: DYNAMO, STARTING MOTOR, BATTERY, LIGHTS, HORN, ODOMETER, AMPERE METER, ACCELERATOR, BRAKE, DIFFERENTIAL LOCK, PTO LEVER, HYDRAULIC LEVER, DRAFT AND POSITION CONTROL LEVER.

Aim: To study the electrical system, instruments in the dash board and controls – components: dynamo, starting motor, battery, lights, horn, odometer, ampere meter, accelerator, brake, differential lock, PTO lever, hydraulic lever, draft and position control lever.

1. INTRODUCTION

Modern agricultural tractors are equipped with advanced electrical systems and precision control mechanisms designed to enhance efficiency, operator comfort, and safety. This study focuses on understanding the tractor's electrical architecture, the function of dashboard instrumentation, and mechanical and electro-hydraulic controls.

2. ELECTRICAL SYSTEM COMPONENTS

1. Alternator

The alternator, also called a dynamo, is a device mounted on the engine that generates electrical energy when the engine runs. It converts mechanical energy into alternating current (AC), which is then rectified into direct current (DC) to recharge the battery and power electrical systems. It plays a vital role in maintaining battery voltage and running electrical accessories continuously during tractor operation.

2. Starter Motor

The starter motor is a high-torque electric motor responsible for turning over the engine flywheel during ignition. It draws a high current from the battery through a solenoid relay, enabling initial engine combustion. Faulty starter motors can cause starting failure or slow cranking.

3. Battery

The battery stores electrical energy in chemical form and supplies it when needed, particularly during engine startup. Tractors commonly use 12V lead-acid batteries. It also powers lighting, horns, and sensors when the engine is off. Regular maintenance, such as electrolyte checks and terminal cleaning, is essential.

4. Ignition Switch

The ignition switch is the control interface for energizing the tractor's electrical circuits. It typically includes OFF, ACCESSORY, ON, and START positions. It connects the battery to the starter motor and other key electrical subsystems like fuel pumps and dashboard indicators.

5. Ammeter / Voltmeter

An ammeter indicates the flow of electrical current into or out of the battery. A voltmeter displays battery voltage and helps monitor charging system health. They assist in diagnosing alternator and battery faults.

8. Horn and Lighting System
The horn is an alert mechanism powered by a button and relay system. Lights include headlamps, tail lamps, and indicators for safety and night visibility. They are controlled via switches on the dashboard and protected through dedicated fuses.

3. DASHBOARD INSTRUMENTS

1. Odometer
The odometer is a calibrated instrument mounted on the dashboard that records the total distance traveled by the tractor or the number of engine hours. In modern tractors, this data helps schedule maintenance such as oil changes and filter replacements. Digital odometers may also store trip logs and service alerts.

2. Tachometer
A tachometer displays the engine's rotational speed in revolutions per minute (RPM). It helps operators manage fuel efficiency and engine performance by maintaining optimal speed during fieldwork or transport operations. Over-revving can lead to mechanical failure, so it is crucial to monitor the tachometer.

3. Fuel Gauge
This device shows the amount of fuel available in the tank using a float mechanism connected to a variable resistor. Accurate fuel level readings help avoid engine stoppage in the field due to fuel shortage. Electronic systems may include low-fuel warning lights or alarms.

4. Coolant Temperature Gauge
The coolant temperature gauge indicates the engine's operating temperature using a thermistor sensor. This helps prevent overheating, which can damage engine components like the head gasket or piston rings. Most systems have warning lights for critical temperature levels.

5. Oil Pressure Indicator
This warning system ensures that the engine oil is circulating under sufficient pressure. A pressure sensor detects if lubrication is inadequate, and the dashboard warns the operator to shut down the engine to prevent damage.

6. Battery/Charging Indicator

The battery indicator lights up if the battery is not being charged properly—either due to alternator failure, loose belt, or broken wire. This early warning allows corrective action before the battery discharges completely.

4. TRACTOR CONTROL MECHANISMS

1. Accelerator (Throttle)

The accelerator regulates the engine speed and power output. It may be a hand lever or foot pedal. Increasing throttle opens the fuel supply to the engine, increasing RPM. Proper throttle management improves fuel efficiency and prevents engine strain.

2. Clutch Pedal

The clutch pedal allows smooth engagement and disengagement of the engine from the transmission system. Pressing the clutch enables gear shifting without grinding or stalling. A worn-out clutch can slip and reduce traction power.

3. Brake Pedals

Tractors usually have split brake pedals for left and right rear wheels, allowing for tighter turns. When locked together, they function as conventional brakes. Proper brake use ensures safety during field operations and transport.

4. Differential Lock

This mechanism locks both rear wheels to rotate at the same speed, which helps in muddy or slippery field conditions. It is particularly useful when one wheel is stuck, and the other is free-spinning. Engaged using a foot or hand-operated control.

5. Power Take-Off (PTO) Lever

The PTO lever engages or disengages the PTO shaft which transfers mechanical power to external implements such as mowers, sprayers, or rotavators. It may be live, independent, or transmission-driven. Proper PTO use is critical for implement performance.

6. Hydraulic Lever

This lever controls the raising or lowering of attached implements through the hydraulic lift system. It activates directional control valves to move hydraulic fluid under pressure. The system may include a depth limiter or float mode.

7. Draft and Position Control Levers

Draft control automatically adjusts the implement depth based on soil resistance, enhancing tillage efficiency. Position control allows the operator to set and hold a specific implement height. Many tractors combine both into a single lever system.

Practical Exercise: 2

i. What is the purpose of a dynamo or alternator in a tractor?
ii. How does a draft control lever differ from a position control lever?
iii. Why is a differential lock important during field operations?
iv. What safety features are provided in the dashboard?
v. What does the ammeter indicate when the tractor is running?

Ex.No.3 Date:----------

IDENTIFICATION OF COMPONENTS OF POWER TILLER, THEIR MAINTENANCE AND STUDY ON PRELIMINARY CHECK MEASURES AND SAFETY ASPECTS BEFORE STARTING A POWER TILLER - PROCEDURE FOR STARTING, RUNNING AND STOPPING THE POWER TILLER

Aim: To identify components of power tiller and study about their maintenance ,preliminary check measures and safety aspects before starting a power tiller - procedure for starting, running and stopping the power tiller.

Components of power tiller

A power tiller consists of the following main parts i) Engine, ii) transmission gears, iii) Clutch, iv) Brakes, V) Roatry unit.

All the power tillers are fitted with an IC Engine. At present most of the power tillers are fitted with diesel engine. Only “Iseki” make use of kerosene engine. Other makes like Kubota, Mitusbishi, Krishi, Yanmar and Satoh all have used diesel engine in India. Manufacturers supply counter weights and ballast weight as optional accessories for balancing and increasing the drawbar power of the power tiller

Power transmission in power tiller

For operation of power tiller, the power is obtained from the I.C. engine, fitted on the power tiller. The engine power goes to the main clutch with the help of belt or chain. From main clutch, the power is divided in two routes, one goes to transmission gears, steering clutch and then to the wheel. The other component goes to the tilling clutch and then to the tilling attachment.

Main clutch

Power goes from the engine to then main clutch. Clutch may be i) friction clutch or ii) V Belt tension clutch.

The main functions of clutch in a power tiller are i) to transmit engine power to transmission gears, ii) to make power transmission gradual & smooth. When clutch lever is in “ON” position, the power is transmitted to the wheels.

Transmission gears

Transmission box consists of gears shafts and bearings. The speed change device may be a) gear type, b) belt type.

Brakes

All power tillers have some breaking arrangements for stopping the improvement. Most of the power tillers use inner side expansion type brakes.

Wheels

Usually 2 to 4 ply pneumatic tyres are used in power tillers. The pressure of the tyres ranges from 1.1 to 1.4 kg/cm^2.

Rotary unit

Power tiller has a rotary unit for the field operations rotary tines are used in rotary unit for soil cutting & pulverization purpose.

Steering clutch lever

Steering clutch is provided on the grip of the right and left handles. When the left side gripped, power is cut off on left side of the wheel and the power tillers turns to the left. Similarly, when the right side is gripped, the power tiller turns to the right.

Operation:

The main clutch is a lever on the handle. The lever can be shifted to on or off position while operating in the field. When the lever is shifted to on position, the power from the engine is transmitted through the main clutch to the various parts ofpower tiller. When the lever is shifted to off position, the power from the engine is cut-off from the rest of the transmission.

Power transmission in power tiller:

Speed Changing: 3 forward and 1 reverse speeds are available to match each specific requirement.

Neutral speed: the engine runs, but the power tiller is not motion.

1st speed: the power tiller moves forward at a low range speed. Suitable for plowing, Soil leveling with implements such as disc plow, moldboard plough, harrow, etc..and for transport.

2nd and 3rd speed: the power tiller moves forward at medium and high range speed, respectively, Suitable for towing a trailer backwards

Safety Precaution

1. Operate the clutch slowly to avoid the power tiller jerking forward and stopping.
2. Do not move the main clutch lever to the "stop" position abruptly, power tiller may come to an abrupt stop and be out of control.

Starting the Power Tiller engine

1. Check engine oil level, fill up to the marks on dipsticks.
2. Clean and refill air cleaner bowl to level marks or tip of the canister.
3. See the radiator is filled up with water if the engine is water cooled.
4. Every night fill up the fuel tank; make sure no water gets into it.
5. Ensure that the gear shift lever is in neutral.
6. Set the hand throttle lever half way, depress the decompression lever and crank the engine. When the engine attains a good speed, the lever is released and the engine starts.

7. Select the gear shift position according to type of work.
8. Slowly release the clutch lever for operation.

Stop the engine

1. Pull the throttle lever to minimum position to stop the engine.

Driving the power tiller

1. For turning the tiller, the steering clutch lever is to be engaged as required on the left or right.
2. The gear position is to be so selected that it is opt for that particular operating condition.
3. While the tiller is operated with trailer, the brake pedal on the trailer may be used for control.

Important

1. 1.Crank the engine with 10 times before starting.
2. 2.While the power tiller operates in wetland with cage wheels care should be taken to avoid water getting into the air cleaner.
3. 3.When stopping the engine, never use the decompression lever.
4. 4.When the tiller is started with the trailer, care should be taken to hold the handle of the tiller low enough while releasing the clutch;
5. 5.While maneuvering field channels and undulation care should be taken, not to upset the stability of the tiller;
6. 6.In very cold temperature use a few drops of 30 grade oil (or petrol) in the inlet manifold (i.e)through air cleaner to facilitate easy starting

Practical Exercise: 3

i. Identify the components of power tiller and explain about its power transmission system.

ii. Write the driving procedures to be followed for power tiller. iii. Write the precautions and important measures to be taken while driving power tiller.

Ex.No.4 Date:----------

IDENTIFICATION AND STUDY OF DIFFERENT COMPONENTS OF DIESEL ENGINE

AIM:

To Identify and study the different components of diesel engine.

STUDY:

Most modern tractors are powered by internal-combustion engines running on gasoline, kerosene (paraffin), LPG (liquefied petroleum gas), or diesel fuel. Power is transmitted through a propeller shaft to a gearbox having 8 or 10 speeds and through the differential gear to the two large rear-drive wheels.

There are two classes of diesel engines: two-stroke and four-stroke. Most diesel engines generally use the four-stroke cycle, with some larger engines operating on the two- stroke cycle.

Diesel engines are the predominant power behind modern tractors since they have a higher thermal efficiency than any internal combustion engine. Also, the highest thermal efficiency is achieved due to their extremely high compression ratio.

The primary difference between Petrol and Diesel engines is that the Petrol engine works on the Otto cycle whereas the Diesel engine works on the Diesel cycle. Other differences can be attributed to the structure, types, and uses of these engines. The main parameter they are classified on is the type of fuel they use.

WORKING

An internal combustion engine is a device that converts reciprocating or linear motion into rotary motion by burning fuel.

Mainly two types of internal combustion is seen nowadays-

- Petrol engine or spark-ignition engine
- Diesel engine or compressor ignition engine

COMPONENTS OF DIESEL ENGINE:

Here are the Different components of ic engine

- Cylinder
- Cylinder Head
- Piston and Piston rings
- Piston pin OR gudgeon pin
- Connecting rod

- Crank and Crankshaft
- Engine Bearings
- Crankcase
- Flywheel,
- Valve and valve Mechanism
- Spark Plug
- Carburetor
- Fuel Injector

CYLINDER

It is the heart of the engine in which fuel is burnt and the power is developed. A cylinder of an IC engine has to withstand very high pressure and temperature because the combustion of fuel is carried out within the cylinder.

Therefore, the cylinder must be cooled. It may be air-cooled in the case of low capacity engines like two-wheelers or water-cooled in case of high capacity engines like cars, trucks etc.

CYLINDER HEAD

The function of the cylinder head is to seal the top end of the cylinder.

It provides space for valve mechanism, spark plug, fuel injector etc.

It is made of cast iron or aluminium.

PISTON AND PISTON RINGS

The function of the piston is to transmit the gas force to connecting rod, hence, to the crank. It slides in the cylinder. Usually, the piston is made of cast steel and aluminium alloy because it requires strength. Pistons are hollow inside due to one face of the cylinder being worked and to reduce the weight of the piston.

Piston rings made of cast steel are provided to prevent the leakage of gas to the crankcase. Upper rings are called compression rings.

lower piston rings are oiling rings. These rings have an oil groove with several holes so as to discharge the excess lubricating oil from cylinder walls to drainage holes in the piston from where oil is sent back to the oil sump.

GUDGEON PIN OR PISTON PIN

It is the pin joining the small end of the connecting rod and piston. It is made of hardened steel by the forging process.

CONNECTING ROD

One end of the connecting rod is connected to Piston through a gudgeon pin called a small end and another end to crank through a crankpin called a big end.

Connecting rod transmits the piston load(gas force) to the crank. It converts the reciprocating motion of the piston into the rotary motion of the crankshaft. These are basically made of nickel, chrome, and vanadium steels by the forging process.

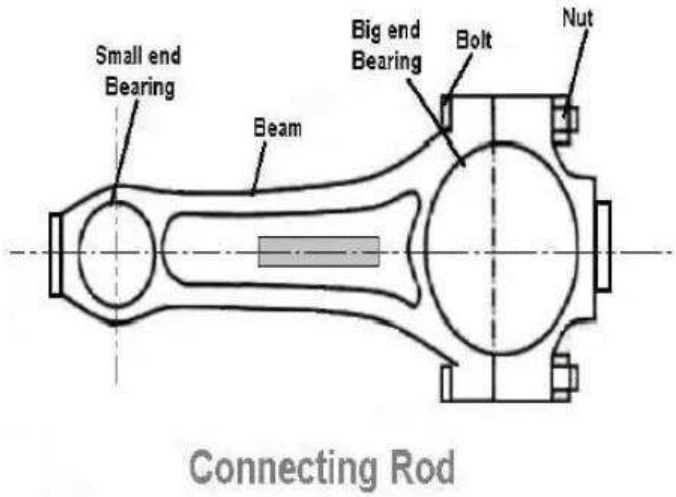

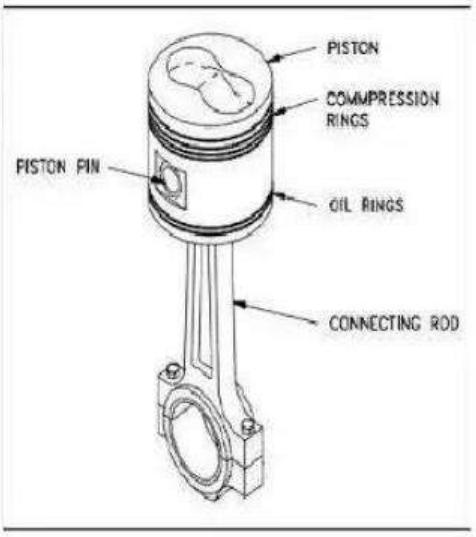

CRANK AND CRANKSHAFT

The crank is an integral part of the crankshaft. It rotates about the axis of the crankshaft and causes the connecting rod to oscillate.

It also carries the flywheel to even out the fluctuating torque. Crank and crankshaft are steel forge and machined to a smooth finish.

ENGINE BEARING

The crankshaft is supported in main bearings, which are lubricated. The function of bearings is to facilitate smooth motion to the crankshaft and reduce friction between them.

CRANKCASE

Crank, crankshaft and main bearings are set in the crankcase. The bottom of the engine is closed by means of an oilsump, which carries lubricating oil.

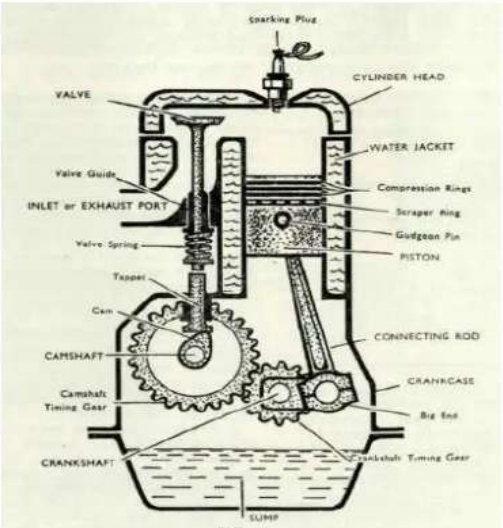

FIG. 1
THE 4-STROKE ENGINE

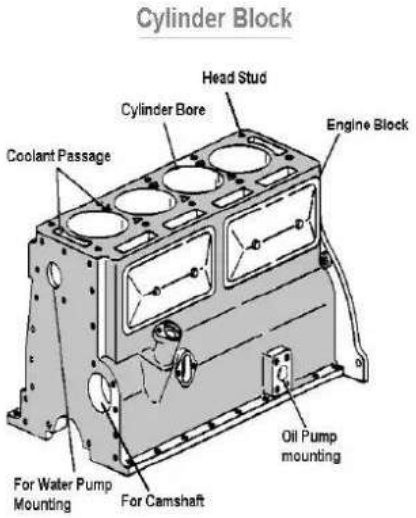

FLYWHEEL

A heavy rotating mass is attached to the crankshaft outside the crankcase called a flywheel.

It minimizes cyclic variation in speed by storing the energy during the power stroke and the same is released during other strokes. It is made of steel or cast-iron discs.

VALVE AND VALVE MECHANISM

The engine has two valves, namely, the suction valve and the exhaust valve.

These valves are operated by a cam mounted on a camshaft.

The camshaft rotates at half the speed of the crankshaft, in the case of four-stroke engines with the help of timing gears having a tooth ratio of 1:2.

SPARK PLUG

The function of a spark plug is to provide a high-intensity spark for the combustion of fuel and air in the cylinder in spark-ignition engines.

CARBURETTOR

The function of the carburetor is to prepare the mixture of fuel and air and meter it before sending it to the induction system of the engine according to the operating conditions of the engine in the case of spark-ignition engines.

FUEL INJECTION PUMP

The function of the fuel pump is to inject the fuel into the cylinder under very high pressure in the case of compression ignition engines.

RESULT:

Ex.No.5 Date:----------

IDENTIFICATION AND STUDY OF DIFFERENT COMPONENTS OF PETROL ENGINE

AIM:

To Identify and study the different components of petrol engine.

STUDY:

A petrol engine (gasoline engine in American English) is an internal combustion engine designed to run on petrol (gasoline). Petrol engines can often be adapted to also run on fuels such as liquefied petroleum gas and ethanol blends (such as E10 and E85).

Most petrol engines use spark ignition, unlike diesel engines which typically use compression ignition. Another key difference to diesel engines is that petrol engines typically have a lower compression ratio.

Petrol engines are popular types of internal combustion engines widely used for decades. It mixes fuel and air after compression. However, modern petrol engines now use a cylinder-direct petrol injection.

In this gasoline engine, pre-mixing was formerly done in a carburetor, due to the improvement of technology; everything is changing, as it was now done by electrically controlled fuel injection.

Well, this is to refresh your memory of my previous post on the petrol engine, how purpose here is to learn about the applications, advantages, and disadvantages of the petrol engines.

COMPONENTS OF PETROL ENGINE

- Spark plug
- Valves
- piston and piston rings
- connecting rod
- crankshaft and sumps

Spark plug: gasoline engines make use of a spark to ignite the fuel and cause a controlled explosion in the engine. The spark plug in engines supplies the spark that is required to ignite the air and fuel mixture.

Valves: this part allows for fuel and air to enter the combustion chamber and later let the exhaust out. They remain sealed only open when required.

Sumps: surrounding the crankshaft, the sumps contain some amount of the oil.

Connecting rod and crankshaft: the connecting rods connect the piston to the crankshaft.

Ex.No.6 Date:----------

FIELD OPERATION AND ADJUSTMENTS OF PLOUGHS

AIM:

i) To study the various components of M.B. plough and their function

ii) To study the various adjustments of M. B.Plough

Introduction: Mould board plough cuts, loosen, invert the furrow slice and provide a deep seed bed of good structure for seed bed preparations. The main functions of M.B. plough are:

Main Function: (i) cutting the furrow slice (ii) lifting the soil (iii) Turning the furrow slice and (iv) pulverising the soil.

Components

M.B. plough consists of Share, Mould board, Land side, Frog and Tail piece.

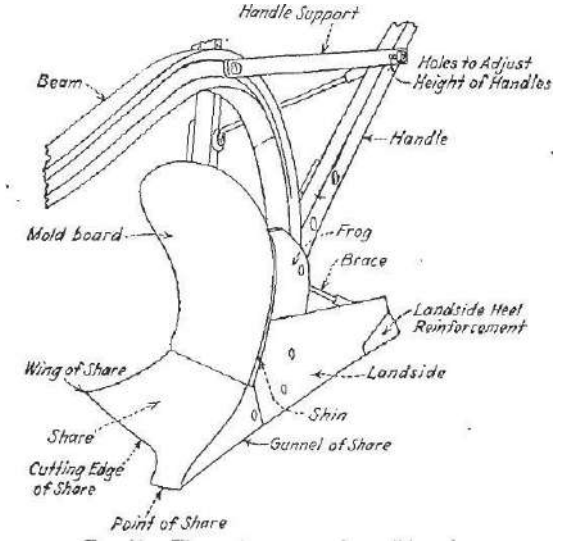

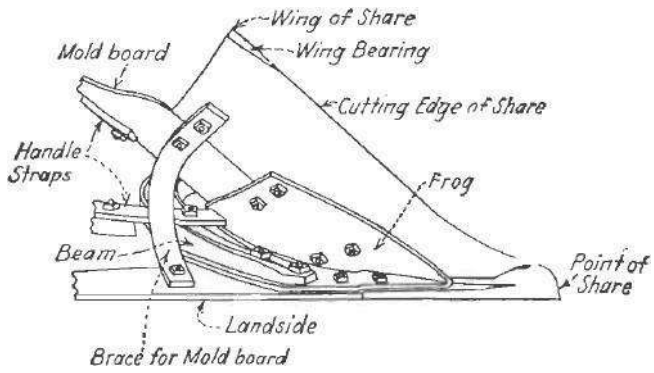

Operation of mould board plough

1. Connect the mould board plough to the three point linkage of the tractor.
2. Take the tractor to the field and park the tractor at one end of the field.
3. Set the implement close to one end of the field and lower the implement using hydraulic control lever in the tractor.
4. Using clutch engage the gears (low range gear and first or second speed gear), rise the throttle and slowly release the clutch.

5. Tractor moves pulling the implement.

6. By adjusting the hydraulic lever adjust the depth of operation of the plough and plough the field.

(A 35 HP tractor pulling a 30 cm, 2 bottom mould board plough can plough to a depth of 25-30 cm. The coverage will be 0.15 ha/h at a speed of 2.5 km/h)

Operating a Mould Board Plough with Tractor:

Tractor wheel settings

The best wheel track for ploughing is that which will allow the tractor to travel in a straight line without side draught when the plough is operating at normal depth. If the wheel track is too wide, there can be a pull to the right and if too narrow, there can be a pull to the left.Generally, however, for most conditions, wheel track settings can be made as follows: For 2 furrow plough: front and rear 52” and For 3 furrow plough: front 52”; rear 56”

Attaching the plough with tractor

1. Ensure that the top link is in position on the plough. Back the tractor so that it is square with the plough crossshaft, and the tractor and plough top and lower link connections are inline.

2. Attach left lower link to plough cross-shaft. Secure with linchpin.

3. Attach right lower link to cross-shaft in a similar manner, lining up by using the leveling lever. Secure with linchpin.

4. Mount the tractor, start the engine and place the forward end of the top link in the tractor top link connection. Using the position control lever or moving the tractor slightly forward, the top link pin can be entered. Secure with linchpin.

(Important: When transporting the plough, wind up the leveling lever fully to reduce the slack in the check chains and to stop the implement from swinging excessively).

Plough settings:

1. **Cross shaft setting:** The cross shaft is set to the nominal width of cut, i.e., 12” and this can be varied by rotating the cross shaft by 1/8” forward or rearward to decrease or increase it by1”

2. **Leveling:** For a good performance, the implement should be in level with the land when viewed from the rear and sides while ploughing. Incorrect leveling will result in uneven furrows and improper turning of the soil.

3. **Top link settings:** Set the top link to its standard length. These length are clearly indicated on the top links for Massey-Ferguson tractors. Standard dimension between ball joint centres is 25”. It can be adjusted between 24 ½ to 26 ½”steps.

4. **Leveling lever:** With the plough at working depth, the lateral leveling is done by using the leveling lever provided in the right hand side of the tractor.

5. **Coulter and jointer settings (if provided):** The coulter and jointer settings are most important. The best rule is to put the plough to work and set the rear coulters to it. Ensure that coulters are kept really sharp and positioned just deep enough to do the work. A disc coulter that is too deep will act as a wheel and carry part of the plough weight. This must be avoided. Adjust the jointers so that the point lightly touches the coulter blade and is just

deep enough to roll a slice of soil and trash into the bottom of the furrow. A set screw on the bracket provides for this adjustment.

6. **Depth of work:** Set the plough to work at the depth require, using the draft control lever. If, on commencing work, having carried out all previous settings as detailed, the check chains are not of equal slackness, rotate the cross shaft manually to correct this fault. Then move the cross-shaft laterally (to the left if front furrow width is too wide and vice versa) to establish correct front furrow width. For adjustment loosen the cross shaft cap bolts that secure the cross shaft to the plough and mark both cross shaft and the bracket so that amount of turn is observed.

7. **Final top link settings:** Adjust length of top link to get all bases working at even depth. If insufficient traction is a problem, shortening the top link slightly to increase the pitch of the plough can result in improved penetration and weight transference.

Field operation:

8. **Headland furrow:** When laying out a piece of ground preparatory to ploughing, do not fail to open headland furrows. These furrows should always be shallow and turned toward the land to be ploughed. Headland furrows make it possible for the plough to penetrate quickly and to make an even finish at the end. The headland furrow should be a single furrow, and can be accomplished when using a two or more furrow plough, by tilting the plough to the left with the leveling lever and ploughing with the rear body only. The amount of tilt is largely determined by experience in the field.

9. **Entering the furrow:** When entering, look over the shoulder and lower the plough just as the rear wheels enter the headland furrow. This will ensure uniform depth from the headland onwards.

10. **Leaving the furrow:** When leaving the furrow, look over the shoulder and raise the plough just as the rear wheels climb out the headland furrow.

(Note: Always be sure that the tractor is straight with the line of work when entering and leaving. This ensures both furrows being full width from the start and also makes finishing the land very much easier).

Practical Exercise:6

1. Draw sketch of tractor drawn mould board and. Label the parts

2. Measure and sketch the horizontal & vertical suctions of the mould board plough

3. List the steps involved in attaching, adjusting, operating and detaching a tractor mounted mould board plough.

4. **Plough size :** The size of the mould board plough is expressed by width of cut of the soil. **5.** Measure the following **parameters of a M.B. Plough**

S. No.	Parameters	Value (mm)			Mean (mm)
		R_1	R_2	R_3	
1	Plough size				
2.	Vertical clearance				
3.	Horizontal clearance				
4.	Throat clearance				
5.	Depth of cut				

6. Write down the functions of following components of M. B. Plough

Components	Function
1. Share:	
2. Mouldboard:	
3. Landside:	
4. Frog:	
5. Tail Piece:	
6. Jointer	
7. Coulter:	
8. Gauge wheel:	
9. Land wheel	
10. Furrow wheel:	

Ex.No.7 Date:----------

FIELD OPERATION AND ADJUSTMENTS OF HARROWS

Aim:

i) To study the various components of disc harrow and their function

ii) To study the various adjustments of disc harrow

Theory: It is a harrow, which performs the harrowing operation by means of a set, or a number of sets of rotating slat discs, each set being mounted on a common shaft. Disc harrow is found very suitable for hard ground, full of stalks and grasses. It cuts the lumps of soil, clods and roots. Disc are mounted on one, two or more axles which may be set at a variable angle to the line of motion. As the harrow is pulled ahead, the discs rotate on the ground. Depending upon the disc arrangements, disc harrows are divided into two classes a) Single action and b) Double action.

The purpose of harrowing:

Harrowing is often carried out on fields to follow the rough finish left by ploughing operations.

1. To break up clods and lumps of soil and to provide a finer finish, a good tilth or soil structure that is suitable for seeding and planting operations.
2. Coarser harrowing may done to remove weeds and to cover seed after sowing.
3. Harrowing is also done to remove small weeds in growing crops and to loosen the inter-row soils to allow for water to soak into the subsoil.

Fig.1. Types of disc harrow

Disc harrow-animal drawn:

Animal drawn disc harrows are only single action disc harrows. There are two gangs of discs each gang consisting of three to four discs mounted on a gang bolt. The gang bolts rotate in bearings with ease. There are weight boxes to add stones or sand bags to improve depth of operation. The disc diameter varies from 30 to 40 cm with concavity of 3 to 4 cm. The width of operation varies from 50 to 70 cm.
They are used for breaking the clods and cutting the weeds

Single action disc harrow- Power tiller drawn:

It is a harrow with two gangs placed end to end, which throw the soil in opposite directions. In one run the soil is handled once only. It is used to break the clods, cut the weeds and prepare a good seed bed..The disc gangs are mounted with bearings for easy rotation of the gangs. There is a main frame to support the discs

and a hitching bar to connect the implement with the power tiller. Disc angle adjusting lever is provided to adjust the disc angle (disc angle = 20-22□). Tilt angle is zero.

Tandem Disc Harrows- Tractor Drawn:

It is a secondary tillage implement. It can be used to break the clods and lumps of soil to provide a good tilth, finer finish and good seed bed suitable for seeding and planting operations. It canal so be used for coarser harrowing to remove weeds and to cover seeds after sowing. Tandem disc harrow is a double action disc harrow with four gangs arranged in two rows. It consists of a) four disc gangs b) scraper blades c) Gang angle adjusting lever d) main frame e) hitch frame and f) weight box.

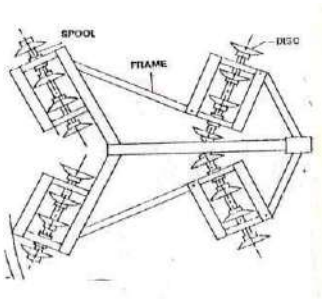

Fig 1. Tandem disc harrow

The front gangs throw the soil outward and the rear gangs throw the soil inward. The gang angle is adjusted from 15-22°. The depth of operation is managed by adding weights on the weight box and also by using hydraulic system of the tractor.

Off-set disc harrows- tractordrawn

It is also a double action disc harrow with two gangs in tandem, capable of being off-set to the centre line of pull. The two gangs are fitted one behind the other. The soil is thrown in both directions because discs face in opposite directions. It is very useful in orchards and gardens. It travels right or left of the tractor. The line of pull is not in the middle, that‟s why it is called off-set disc harrow.). Off-set disc harrow is based on the basic principle that side thrust against the front gangis opposed by the side thrust of the rear gang. Hence the gangs are arranged at suitable angles so that both thrusts are counter balanced with each other.

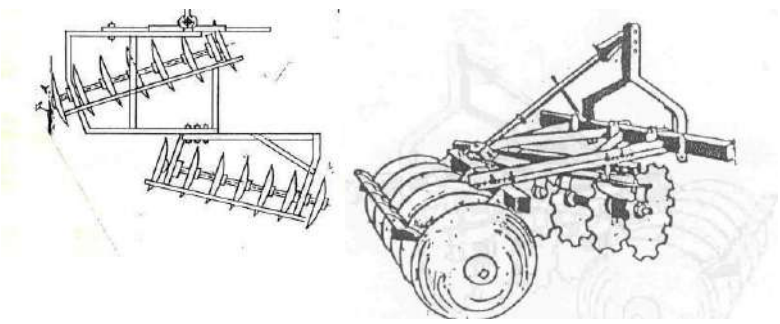

Fig.2. Off-set disc harrow

Parts of off-set disc harrow

i. **Disc:** It is a circular concave revolving steel plate used for cutting a inverting the soil. Disc is made of high glass heat-treated hardened steel. Tractor drawn disc harrows have concave discs of size varying from 35-70 cm diameter. Concavity of the disc affects penetration and pulverization of soil. Usually two types of disc are used in disc harrows, plain disc and cut away disc. Plain discs have plain edges and they are used for all normal works. Most of the harrows are fitted with plain discs only. Cut away discs have serrated edges and they cut stalks, grass and other vegetation. They are not effective for pulverization of soil but it is very useful for puddling the field especially for paddy cultivation.

ii. **Gang :**Each set of discs that are mounted on a common shaft is called the gang.

iii. **Gang bolt or arbor bolt :**It is a long heavy of square headed bolt from the other end, a set of discs are mounted on the gang bolt. The spacing between the discs on the gang bolt ranges from 15 to 25 cm for light duty and 25 to 30 cm for heavy duty harrows. The angle between the axis of the gang bolt and the direction of travel is called the gang angle.

iv. **Gang control lever:** A lever, which operates the gang mechanisms of the disc harrow, is called the gang control lever.

v. **Spool or spacer:** The flanked tube, mounted on the gang bolt between every two discs to prevent the lateral movement of the disc on the shaft is called the

`spool‟ or `spacer‟. It is just a device for keeping the discs at equal spacing on the gang bolt. It is usually cast in special shapes and sizes and is generally made of cast iron.

vi. **Bearing:** Bearing is essential to counter at the end thrust of the gang due to soil thrust. The harrow bearings are subjected to heavy radial and thrust roods chilled cast iron bearings are used to heavy radial and thrust loads and they are also used due to their durability.

vii. **Transport wheel:** In trailing type disc harrow, the transport wheels are provided for transport work on roads and for preventing the edges of the discs from damage. Mounted type disc harrows do not require wheels for transport work.

viii. **Scraper:** It prevents disc from clogging. It removes the soil that may stick to the concave side of thedisc.

ix. **Weight box:** A box like frame is provided on the main frame of the harrow for putting additional weight on the implement. Additional weight helps in increasing the penetration of the disc in the soil.

There are several factors which affect the penetration of disc harrow in the field.

The following are a few adjustments for obtaining higher penetration

i. By increasing the disc angle
ii. By adding additional weight in harrow
iii. By lowering the hitch point
iv. By using the sharp edged discs of small diameter and losses concavity
v. By regulating the optimum speed.

Introduction/Procedure:

Disc harrow is secondary tillage equipment designed for harrowing / land preparation of rough soil (Secondary tillage/ finer operation). It is generally used for breaking the clods and partially inverting the soil. Regular and satisfactory operation together with economic and long lasting use of the implement depends on the compliance with instructions provided by the manufacturers. Thoroughly read the instruction manual before proceeding with the various operations and maintenance.

Operational guidelines for disc harrow

Instructions for the driver

1. When Disc harrow is ready for use don't stand between disc harrow & the tractor.
2. Properly fit the three point linkage as mentioned above & lock with lynch pin.
3. In case of scrapper touching the discs, loosen the scrapper bolt and readjusts the scrapper.
4. Never turn the tractor to the right or left when the harrow is engaged in the soil.
5. Never reverse the tractor when the harrow is engaged in the soil.
6. To get good results from the harrow, disc should be replaced when its diameter is reduced by 5" (125mm) from its original size.

Field operation:

a) Lift the harrow on turning for effective independent breaking of soil.
b) Adjust internal/ external check chains to obtain implement swing range within 50 mm (2") when raised.
c) Always maintain the correct tyre pressure to avoid wheel slippage.
d) Adding of wheel weights/water ballasting or combination of both is recommended when excessive rear wheel slippage is experienced.
e) Always set hydraulic levers correctly for draft and position control operation.

The following settings are necessary to ensure that uniform working depth is maintained:

i) **Side draft:** The offset disc harrow will trail correctly behind the tractor provided the side thrust of the front gang is equal to that of rear. In case it is different there will beside draft. To set it correctly the gang angle should be changed

ii) **Severe side draft:** In case of severe side draft the cutting depth of rear disc gang should be increased or decreased with the help of tractor top link. For instance when tractor pulls to right, lower the rear gang and when tractor pulls to left, raise the rear gang.

f) Warning for driver:

1. Before harrowing check all nuts & bolts of the harrow disc.
2. Before harrowing with harrow disc take care that nobody stands near it.
3. Be vigilant about the tree roots and stones. Don‟t harrow on stony soil.
4. Tractor should be in first high or fourth low gear.
5. Do not allow anyone to come across the harrow.
6. Lift the disc harrow on every turn.
7. Lift the harrow before approaching the road.

g) Precautions during transportation:

1. When transporting the harrow, shorten up top link to minimum length.
2. Set hydraulic lever in top raised position and lock levers.
3. Maintain the speed to avoid jump.
4. Watch while overtaking on road.
5. Always use SMV (Slow Moving Vehicles) symbols.

Adjustments in disc harrow

a) Adjustment before use:

1. Before mounting of disc harrow make sure that all nuts & bolts are properly tightened.

2. Also determine soil and trash conditions of the field and make the preliminary adjustments as discussed below:

   1. **Disc gang angle adjustment: -**

      Gang angle (Angle between two gangs) ranges from 0° to 50°. The angle can be increased for better penetration in dry soil while it should be reduced to avoid plugging in wet soil.

   2. **Disc harrow leveling: -**

      To eliminate uneven penetration and side draft, leveling is done by means of top link& bottom adjustable link. While tractor pulls to right the rear gang should be lowered a little. When the tractor pulls to the left the rear gang should be raised.

   3. **Scrapper adjustment: -**

      The scrapper can be adjusted by loosening the bolts at the scrappers clamp.

4. **Depth control: -**

The depth at which the implement is required to work is controlled hydraulically by raising or lowering the left control lever.

5. **Disc harrow penetration:-**

Factors affecting disc harrow penetration are:-

- Angle of the gangs
- Weight of the harrow
- Disc diameter
- Disc sharpness (Blunt disc increases the draft considerably, check the disc sharpness)
- Angle of hitch **Maintenance of disc harrow**

a) Maintenance instructions

If the harrow is used in the stony land then maintenance of disc harrow also increases.

1. If the soil has entered the grease nipple, then change the nipple.
2. If disc harrow is new, then after initial working of first two hour, tighten all nuts & bolts.
3. After every fifty hours of use, grease all greasing points with grease gun and tighten all nuts & bolts.
4. After fifty hours of use, open the bracket spool of disc harrow & clean with diesel oil & pump in new grease.

5. **Trouble shooting chart for disc harrow**

Sr. No.	**Possible cause**	**Possible remedies**
A. Side draft		
1	Disc not running level.	Adjust using leveling lever
2	Gangs improperly angled	Set the gang angle properly
3	Too much left hand offset	Swing the hitch to the left
B. Excessive field slippage		

1	Tractor overloaded	Reduce angle, reduce depth
2	Not enough tractor ballast	Add wheel weight or liquid in tyres
C.	Not filling the furrow	
1	Too much left hand offset	Swing hitch to the right hand
2	Tractor wheel running in furrow enlarging it.	Drive the tractor in unworked ground
3	Discs too far from furrow	Keep the left front discs in furrow
4	Rear gang set wrong , laterally	Move the rear gang right or left. The left rear should be centered in the space between left front discs.
D. Poor penetration		
1	Hard ground	Swing hitch to the right. Increase angle in front and rear gang.
E. Disc unsteady		
1	Too much angle in gang	Reduce gang angle
F. Gang plugging		
1	Field too wet	Disc at shallow depth for first pass to speed up drying process
2	Gang set in maximum angle	Reduce the gang angle

3	Not using scrappers	Install scrappers
4	Scrappers worn out or not set properly	Replace worn ones, Adjust scrappers close to the disc
5	Discing too deep in damp soil	Reduce penetration of harrow

Practical Exercise:

1 Write the name of following types of disc harrow

1. _____ 2. _____ 3. _____

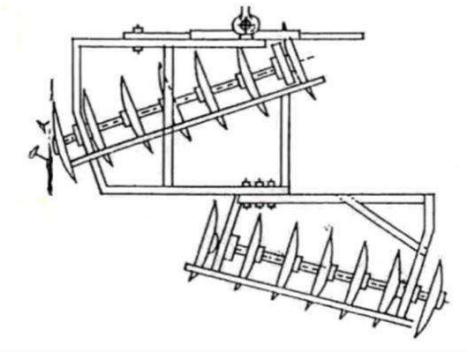

4._____

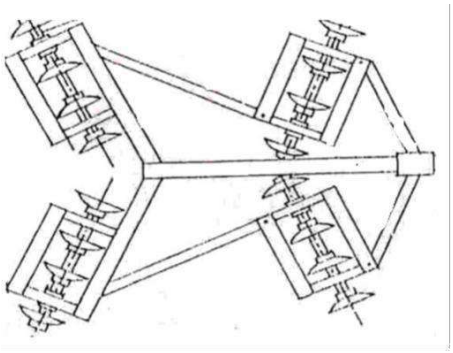

5._____

2. write down the functions of different components of disc harrow

Components	Functions
Disc	
Gang	
Arbor Bolt	
Gang Axle	
Gang Controll lever	
Weight Box	

Spool/Spacer	
Transport Wheel	
Bearing	
Scraper	

3. Write down the name of following types of harrow and their special use.

Picture	**Name of harrow**	**Special use**
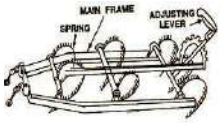		
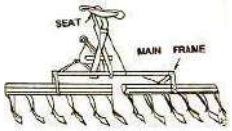		
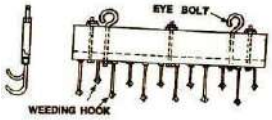		

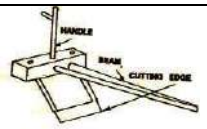 HANDLE BEAM CUTTING EDGE		
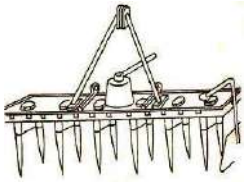		

Ex.No.8 Date:----------

FIELD OPERATION AND ADJUSTMENTS OF CULTIVATORS

Aim:

i) To study the various components of a cultivator and their function

ii) To study the different types of shovel and sweep used in a cultivator

Introduction: It is an implement for inter cultivation with laterally adjustable tines or discs to work between crop rows. The cultivator stirs the soil, and breaks the clods. The tines fitted on the frame of the cultivator comb the soil deeply in the field. A cultivator performs functions intermediate between those of plough and the harrow. Destruction of weeds is the primary function of a cultivator.

Functions:

- Inter culture the fields.
- Destroy the weeds in the field.
- Aerate the soil for proper growth of crops.
- Conserve moisture by preparing mulch on the surface.
- To sow seeds when it is provided with sowing attachments.
- To prevent surface evaporation and encourage rapid infiltration of rain water into the soil.

The cultivator can be 1) Disc cultivator, 2) Rotary cultivator, 3) Tine cultivator.

Depending upon the type of power used they are called as tractor drawn or animal drawn cultivator. Different types of shovels & sweeps namely 1) Single point shovel b) Double point shovel c) Spear head shovel d) Sweep e) Half sweep f) Furrower are used in the tynes depending upon the intended use

Tractor drawn Cultivator with spring loaded tines

Cultivator is a secondary tillage implement. Tines fitted on the frame comb the soil deeply in field. Cultivators perform intermediate between plough and harrow.

- The depth of operation is 10-12 cm.
- In mounted type of cultivators depth of operation is managed using the hydraulic system.
- It consists of a main frame, hitch frame, cross bars and tines fitted with shovels.
- Each tine is hinged to the main frame and loaded with a spring so that it swings back when an obstacle is encountered.
- Heavy duty coil springs are used for each tine.
- When the tynes strike roots or large stones the springs allow the tines to ride over the obstruction, thus preventing damage.
- On passing over the obstruction, the tines are automatically reset and work continues without interruption.

Practical Exercise:

1. Label the parts of following cultivator and write their function.

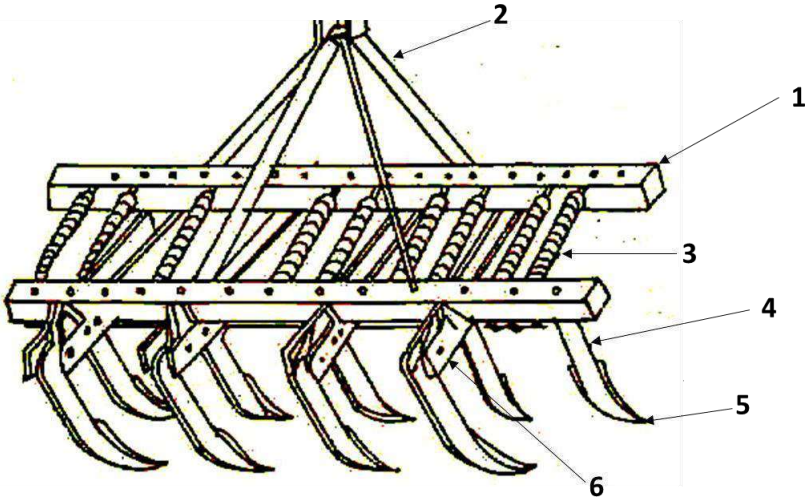

Fig. 7.1 Cultivator with spring loaded tynes

S.no	Components	Uses/Functions
1		
2		
3		
4		
5		
6		

2. Write the name of following types of shovel /sweep alongwith their specific use.

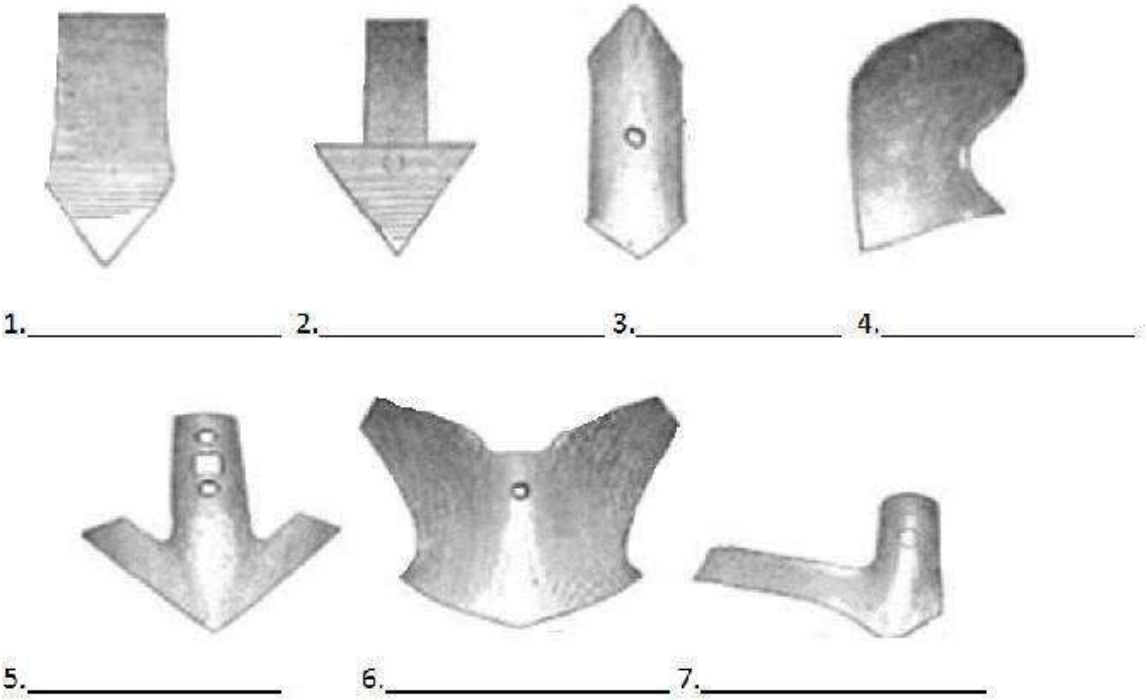

S.no	Name	Uses/Functions
1		
2		
3		
4		
5		
6		
7		

Ex.No.9 Date:----------

FIELD OPERATION OF SOWING AND PLANTING EQUIPMENT AND THEIR ADJUSTMENTS

Aim:

i) To study the various components of seed cum fertilizer drill

ii) To study the calibration method of seed cum fertilizer drill

Introduction: Seeding or sowing is an art of placing seeds in the soil to have good germination in the field. A perfect seeding gives (a) Correct amount of seed per unit area. (b) Correct depth at which seed is placed in the soil. (c) Correct spacing between row-to-row and plant-to-plant.

Seed cum fertilizer drill : Seed cum fertilizer drill consists of dropping seeds in furrow lines in a continous flow and covering them with soil.

Components of Seed Drill :A seed drill with mechanical seed metering device mainly consists of: (i) Frame (ii) Seed box (iii) Seed metering mechanism (iv) Furrow openers (iv) Covering device (vi) Transport wheels.

Frame:

The frame is usually made of mild steel angle section and flats . It is strong enough to withstand all types of loads in working condition. All other parts of a seed drill are fitted to the frame.

Seed box:

It is a box like structure made up of either mild steel or galvanized iron and provided with a lid. In some designs a small agitator is provided at the bottom of the box which agitates the seeds while the drill in operation and prevents clogging of seeds. Seed metering mechanism is placed at the bottom of the box.

Seed Metering Mechanism: The mechanism of a seed drill or fertilizer distributor which delivers seeds or fertilizers from the hopper at selected rates is called ***seed metering mechanism***. Seed metering mechanism may be of several types:

(a) Fluted feed type (b) Internal double run type (c) Cup feed type (d) Cell feed mechanism (e) Brush feed mechanism (f) Auger feed mechanism (g) Picker wheel mechanism (h) Star wheel mechanism.

Types of seed metering mechanisms:

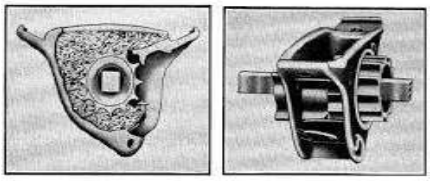

Fig. 11.7. Fluted-wheel type of seed-metering device. (Deere & Co.)

(a) Fluted feed type

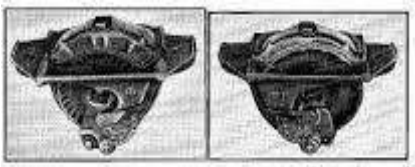

Fig. 11.8. Internal double-cup seed-metering device, showing large and small sides of the wheel, for large or small seeds. (Deere & Co.)

(b) Internal double runtype

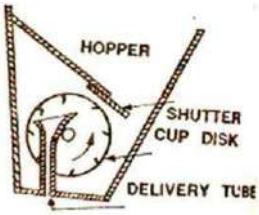

(c) Cup feed type

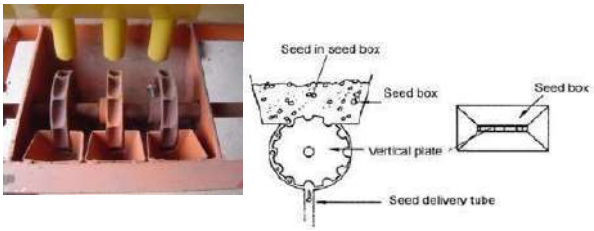

(d) Cell feed mechanism

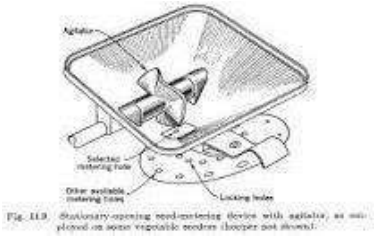

Fig. 11.9. Stationary-opening seed-metering device with agitator, as sometimes used on some vegetable seeders (hopper not shown).

(e) Brush feed mechanism

(f) Auger feed mechanism

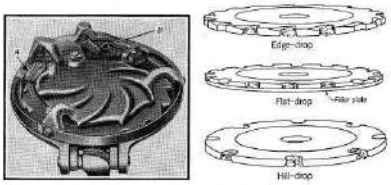

Fig. 11.4. *Left:* Hopper bottom for typical horizontal-plate corn planter. Note the spring-loaded (yielding) cutoff *A*, and the spring-loaded knockout pawl *B*. *Right:* Three types of edge-cell plates used interchangeably in this hopper bottom. (International Harvester Co.)

(g) Edge cells

Drive transmission system:

The drive transmission mechanism consists of a wheel, sprocket-chain assembly and a driven shaft that carry the seed picking discs. When the seed drill moves in the field, the drive wheel rotates due to its contact with soil and the sprocket wheel also rotes. The chain connecting the drive wheel sprocket and driven wheel sprocket rotates the shaft carrying the seed metering discs.

Furrow openers:

These are the parts which open up furrows in the soil for placing the seeds. Different types of furrow openers in use namely 1. Hoe type 2. Shoe type 3. Stub runner type 4. Full or curved runner type 5. Single disc type 5. Double disc type etc. In cultivator type seed drills the tines work as furrow openers.

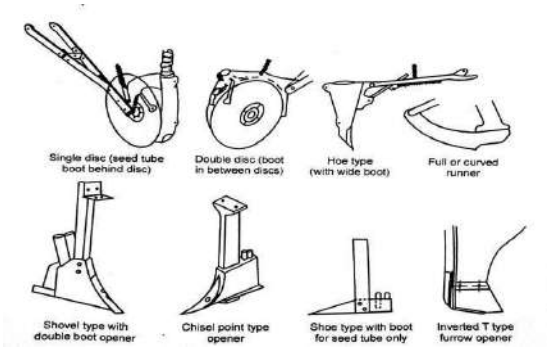

Covering device or furrow closer

It is a device which closes the furrow with soil after the seed has been dropped in it. Covering the seeds is usually done by chains, bars, packers, rollers or press wheels, designed in various shapes and sizes.

Transport wheel

There are two wheels fitted on an axle for transporting the drill on roads. Iron wheels are used as transport wheels. Some manufacturers use pneumatic wheels. One of the transport wheels is fitted with a suitable attachment to transmit the motion of the wheel to the seed metering mechanism when the drill is inoperation.

1. Tractor drawn cultivator seed drill

It is a tractor drawn equipment used for line sowing of crops like groundnut, sorghum, maize and pulses. Tractor industry in India has grown and now about two lakh sixty thousand tractors are being produced per annum. Even small and medium farmers are hiring the tractor for different agricultural operations. Any farmer who owns a tractor is invariably having the tractor drawn cultivator. Seed boxes along with cup feed type seed metering mechanism are mounted on the cultivator frame and the seeds are dropped in furrows opened by the cultivator shovels. Detachable side wings are fixed to the existing shovel type furrow openers of the cultivator, which helps in placing the seed at the required depth. Power to operate the seed metering discs is taken from the ground wheel drive through a clutch. A square bar is provided at the back of the unit to close the furrows. An area of 4 ha can be covered per day. Suitable for sowing groundnut, sorghum, Bengal gram, maize, soybean and pulses. Results in 48 and 91% saving in cost and time respectively.

2. Tractor drawn inclined plate seed planter / hill drop planter:

The planting mechanism consists of a seed hopper having two compartments one for seed storage and other for seed metering. The seed metering mechanism is of cup feed type as it was found effective for various types of seeds. The cup feed mechanism also has the advantage of minimum seed damage compared to other common types of seed metering devices. A ground wheel with spikes is provided for driving the seed-metering device. A funnel like structure was provided in the seed-metering compartment for guiding the metered seeds to the seed placement device. On the lower side of the seed funnel a transparent flexible PVC hose is connected to the seed placement device. There a trigger mechanism at the lower level of all the seed tubes, which will be closed at all times. The trigger is actuated by a lever fitted to the side mounted ground wheel of the unit and allowing the collected seeds to fall in the furrow opened by the floating type furrow openers as shown in figure. This helps for maintaining the hill to hill distance uniformly. The number of seeds in each hill is adjustable. The planter is suitable for sowing cotton, soybean, black gram, green gram, maize, cow pea, etc.

3. Seed cum fertilizer drill

Seed cum fertilizer drills are used for sowing of wheat and other cereal crops in already prepared field. The seed cum fertilizer drill machine consists of seed box, fertilizer box, seed metering mechanism, fertilizer metering mechanism, seed tubes, furrow openers, seed rate adjusting lever and transport cum power transmitting wheel. The fluted rollers are driven by a shaft. Fluted rollers, which are mounted at the bottom of

the seed box, receive the seeds into longitudinal grooves of fluted roller and expel them in the seed tube attached to the furrow openers. By shifting the rollers sideways, the length of the grooves exposed to the seed, can be increased or decreased and hence the amount of seed sown is changed. The seed cum fertilizer drill is popular in northern region of the country.

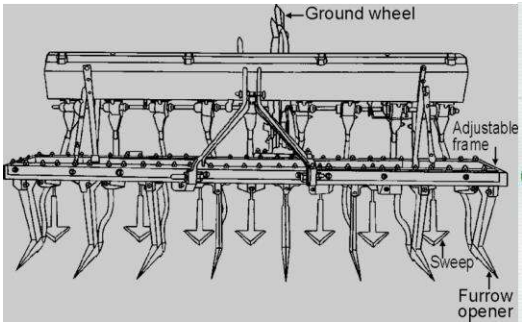

Calibration of seed drill: The procedure of testing the seed drill for correct seed rate is called calibration of seed drill. It is necessary to calibrate the seed drill before putting it in actual use to find the desired seed rate. It is done to get the pre determined seed rate of the machine. The following steps are followed for calibration of seed drill.

Procedure:

i. Determine the nominal width (W) of seed drill

W = M x S,

Where,

M = Number of furrow openers, and S = Spacing between the openers, m

ii. Find the length of the strip (L) having nominal width (W) necessary to cover 1 ha (10000 m^2)area

L = 10000/W, meter

iii. Determine the number of revolutions (N) of the ground wheel of the seed drill required to cover the length of the strip(L)

L = π x D x N = 10000/W

N = 10000/ π x D x W revolutions per minute

iv. Jack the seed drill so that the ground wheels turn freely. Make a mark on the drive wheel and a corresponding mark at a convenient place on the body of the drill to help in counting the revolutions of the ground wheel

v. Fill the selected seed in the seed hopper. Place a container under each boot for collecting the seeds dropped from the hopper

vi. Set the seed rate control adjustment for maximum position and mark this position on the control for reference

vii. Engage the clutch and rotate the ground wheel for N=10000/πxDxN, revolutions per minute

viii. Weigh the quantity of seed collected in the container and record the observation.

ix. Calculate the seed rate in kg/ha

x. If the calculated seed rate is higher or lower than the desired rate of selected crop, repeat the process by adjusting the seed rate control adjustment till the desired seed rate is obtained.

Practical Exercise: 6

1. Identify the following seed metering mechanism.

Sketch of metering mechanism	Name of metering mechanism
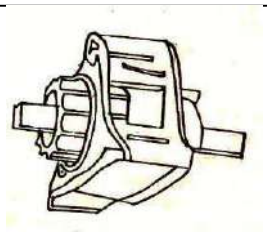	_____
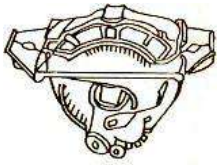	_____
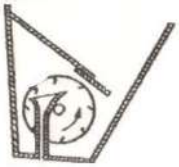	_____
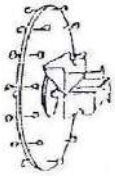	_____
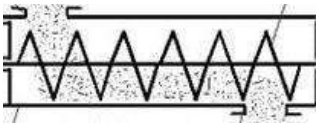	_____

2 Identify the type of furrow openers used in seed cum fertilizer drill as shown below.

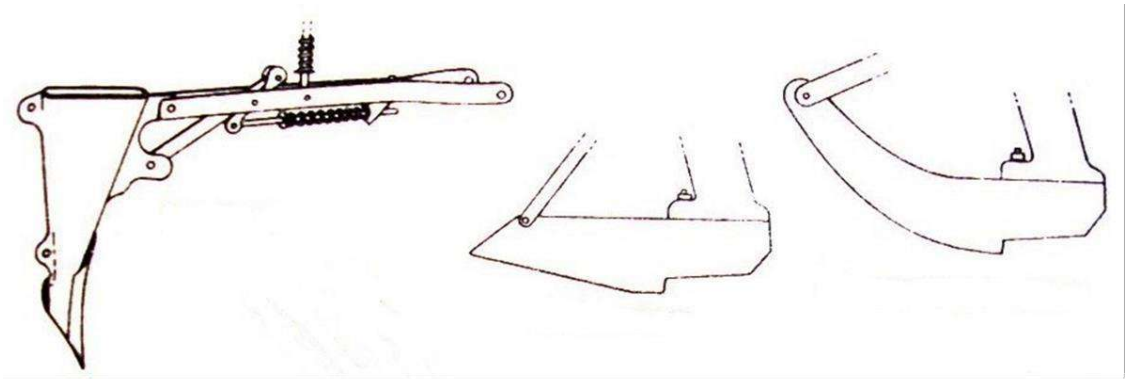

1._____ **2.** _____ **3.** _____

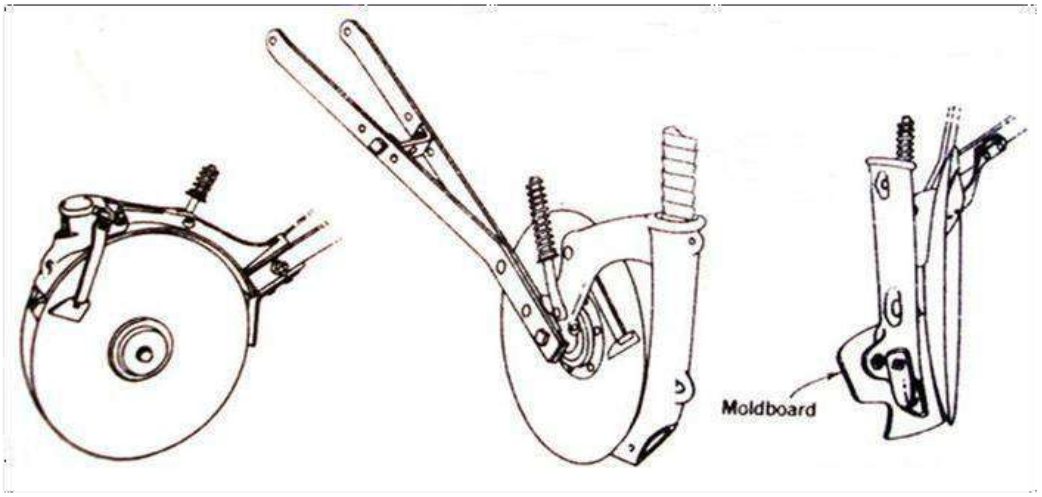

4._____ 5._____ 6._____

3 Label the component of the seed cum fertilizer drill and write their main function

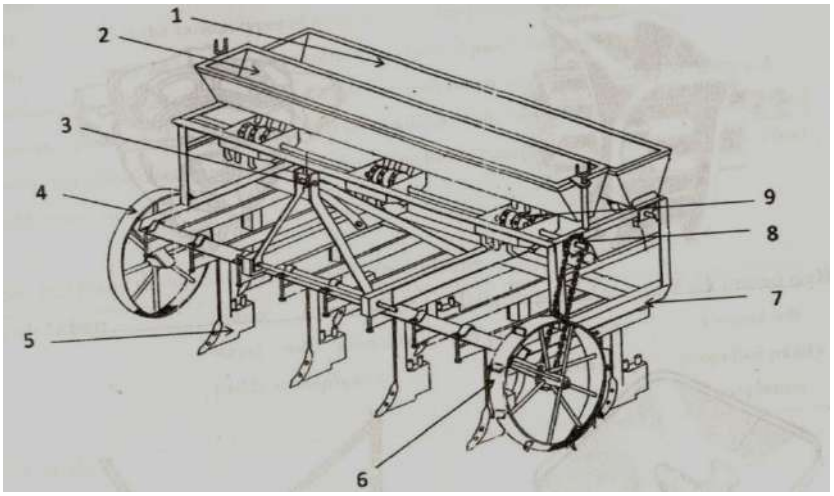

S.no	Components	Functions
1		
2		
3		
4		
5		
6		
7		
8		
9		

Ex.No.10 Date:----------

FIELD OPERATION OF PLANT PROTECTION EQUIPMENT

Aim:

To study the major components and their functions
To study the various types of sprayer and their application
To study the various types of nozzles and their applications

Introduction: Sprayer is a machine to apply fluids in the form of droplets. Sprayer is used for the following purpose.

- Application of herbicides to remove weeds.
- Application of fungicides to minimize fungus diseases.
- Application of insecticides to control insect pests.
- Application of micro nutrients on the plants.

The main function of a sprayer are

(1) To break the liquid droplets of effective size. (2) To distribute them uniformly over the plants.

(3) To regulate the amount of liquid to avoid excessive application.

Basic Components of Sprayer: Components of a sprayer are as follows

(1) Nozzle body (2)Swirl plate (3) Filter (4) Over-flow pipe (5) Relief valve (6) Pressure regulator (7) Cut-off valve (8) Spray boom (9) Drop legs (10) Nozzle boss (11) Nozzle disc (12) Nozzle cap

(13) Nozzle tip (14) Spray lance (15) Spray gun.

Knapsack hand operated sprayer;

It has a flat or bean-shaped tank designed to fit comfortably on the back of the operator. The capacity of the tank is 10-20 litres. It is generally, made of galvanized, iron, brass or stainless steel. Recently, plastic material has also been used for the construction of the spray tank (Fig.3). The pressure developed in these sprayers depends on the pump and varies from 3 to 12 kg/cm^2 which are more than that developed in a hand compression sprayer. However, a pressure of 3-4 kg/cm^2 can be maintained in most cases without much effort. The sprayer can be used for spraying row crops, vegetables and nursery stocks and shrubs and trees2- 2.5m high. It is also useful for spot treatment and residual indoor spraying. These sprayers are very commonly used in the rice-growing areas. With these sprayers, the job of the operator is tiring,

especially over long period. The operator has to bear the weight of the sprayer containing the fluid and is simultaneously required to operate the pump lever with one hand and the spray lance with other hand. Under the situation, lighter the equipment and lever the effort needed for operation, the less troublesome would be the safe operation.

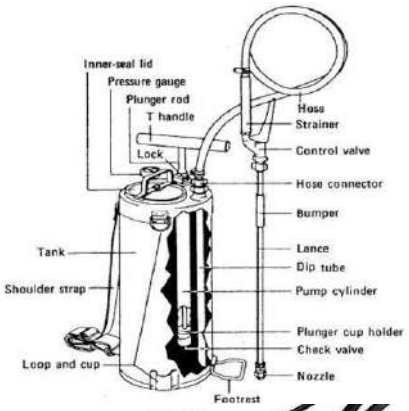

Practical Exercise:7

1. **Label the major parts of knapsack sprayer shown below and write their function.**

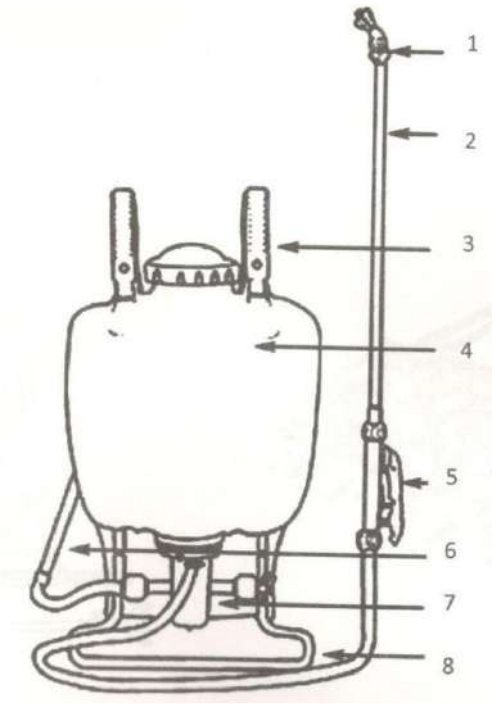

S.No	Components	Function
1		
2		
3		
4		
5		
6		
7		
8		

2. Identify the following sprayers and write their specific use.

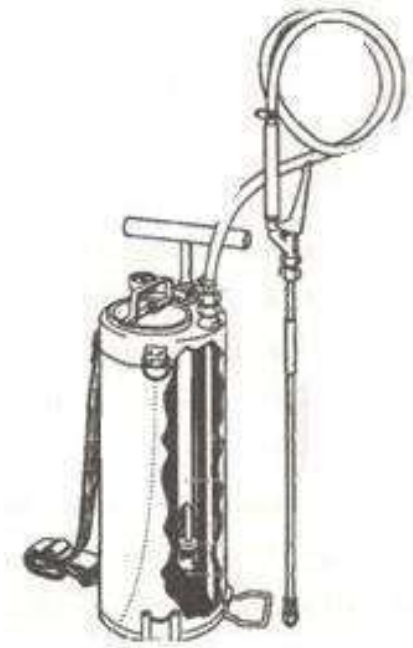

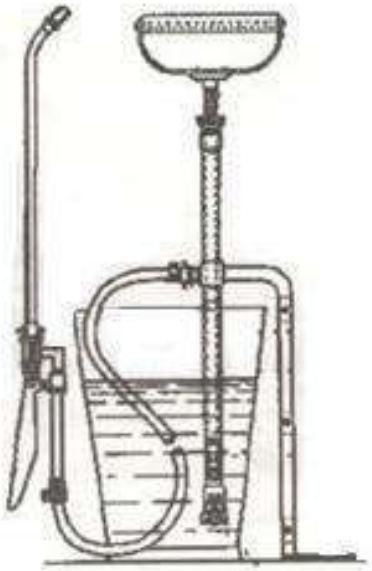

1._____ **2._____**

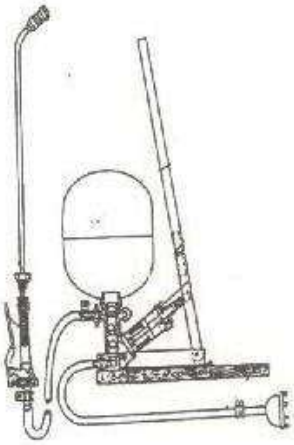

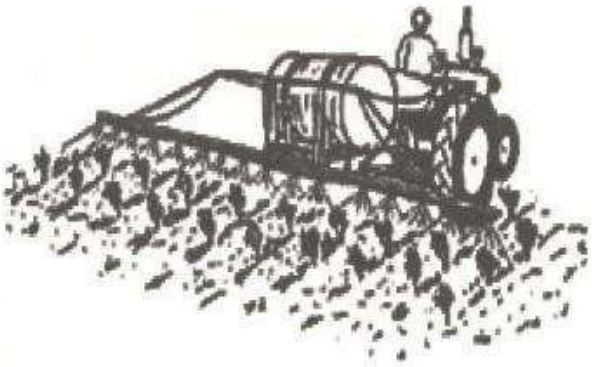

3._____ **4.**

3. Identify the following nozzle and their spray pattern being used in agriculture

1. _____ **2.** _____ **3.** _____

4. Measure the discharge of different types of nozzle used in sprayers

Nozzle Type	**Discharge (*l*/min)**			**Average discharge (*l*/min)**
1.				
2.				
3.				

Ex.No.11 Date:----------

FIELD OPERATION ON MOWERS AND REAPERS

Mower

The mower is a machine mainly used for harvesting grasses and forage crops. It cuts the stems of standing vegetation to make hay out of them. The mower cutter bar is capable of cutting the stems at 3-10 cm above the ground. There are different types of mowers used for cutting grass and forage crop such as cylinder, reciprocating, horizontal rotary and flail type mowers. According to the source of power, mowers can be classified as manually operated, animal-drawn, tractor-drawn and selfpropelled. According to the mode of hitching, mowers can be classified as trailed type, semi-mounted and integral mounted type. Semi-mounted and integral-mounted mowers can be further classified as rear, mid and front-mounted. According to drive used, mowers can be classified as ground-driven, engine-driven and PTO driven. The conventional animal-drawn mower has the following main parts:

- A cutter bar to cut the crop and separate it from uncut portion.
- Power transmission unit to receive and transmit motion force.
- Frame to support moving parts.
- Wheels to transport and for operating the cutting mechanism, and Auxiliary parts to lift and drop the cutter bar.

Adjustments of mower reaper

Sr. No.	Part	Problem	Adjustment
1.	Reel	i) Does not rotate ii) Improper gathering of crop	i) Check tension of reel belt. Reel by hand to ensure that the drive pulley key and belt are secured. ii) Adjust height according to height of crop
2.	Cutter bar	Unsatisfactory cutting	i) Reduce forward speed ii) Correct the registration iii) Sharpen the knife sections or replace if worn out. iv) Check drive belt tension. If loose, tighten

Reaper

Harvesting of cereal crops especially wheat and rice is a serious problem. There is a tremendous crop loss when untimely rain is experienced. Delayed harvesting causes grain shattering due to over maturity. The standing crop in the field can be harvested with the use of reapers. A reaper may be classified as animal-drawn reaper, animal-drawn engine operated reaper, tractor rear mounted PTO operated reaper, power tiller operated or tractor front mounted vertical conveyer type reapers and tractor mounted reaper binder.

Reaper problems and adjustments

S. No.	Part	Problem	Adjustment
1.	Reel	i) Does not rotate ii) Improper gathering of crop	i) Check tension of reel belt. Reel by hand to ensure that the drive pulley key and belt are secured. ii) Adjust height according to height of crop
2.	Cutter bar	Unsatisfactory cutting	i) Reduce forward speed ii) Correct the registration iii) Sharpen the knife sections or replace if worn out. iv) Check drive belt tension. If loose, tighten
3.	Binding & tying mechanism	i) Broken or torn twine. ii) Loose or untied knot iii) Frequent untied bundles iv) Improper cutting of twine	i) Remove twine and clean needle eyelet and pliers. Reduce tension on twine under the tension plate through fly-nut ii) Tighten the twine disc with the help of spring loaded screw-bolt provided for the purpose iii) Adjust spring tension and smooth face of pliers by emmary paper. Use twine of uniform thiclmen

4.	Conveyor	i) Bundles keep collecting on conveyor ii) Conveyor slackened & bundles not conveyed at regular internal	i) Check the tension or the v-belt over the conveyor roller pulley. ii) Tighten the convas conveyor with help of the sum buckles provided
5.	Bundle size		Increase or decrease the size of bundles by increasing or decreasing the tension of trigger. For this the trigger spring is hooked on to different holes provided

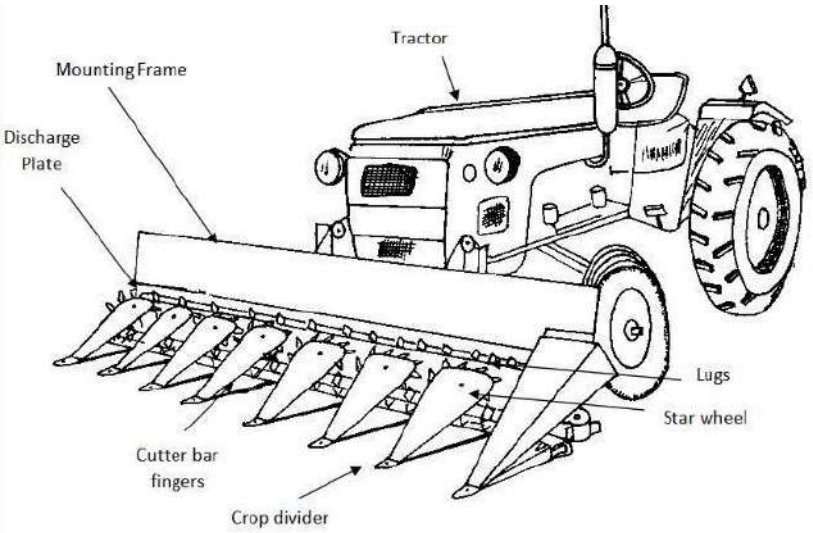

Fig. 3: Tractor front mounted vertical conveyer reaper windrower.

Ex.No.12 Date:----------

FIELD OPERATION OF COMBINE AND DETERMINATION OF FIELD LOSSES

Aim: A combine is farm machine that combines the reaper and thresher to harvest the standing crop, thresh it and clean the grain from straw in one operation. Various designs of combine harvester having 2 to 6 m long cutter bar are commercially available. The function of a combine harvester is to cut, thresh, winnow and clean grain/seed. It consists of header unit, threshing unit, separation unit, cleaning unit and grain collection unit.

Introduction:

The function of the header is to cut and gather the crop and deliver it to the threshing cylinder. The reel pushes the straw back on to the platform while the cutter bar cuts it. The crops are threshed between cylinder and concave due to impact and rubbing action. The threshed material is shaken and tossed back by the straw rack so that the grain moves and falls through the openings in the rack onto the cleaning shoe while the straw is discharged at the rear. The cleaning mechanism consists of two sieves and a fan. The grain is conveyed with a conveyor and collected in a grain tank.

ADJUSTMENTS IN HARVESTING EQUIPMENT:

Grain losses before and during field operation of combine:

There are different types of grain losses in the field before and during combining of crops. Moisture contents at the time of harvesting affects the grain losses. At low moisture content, grain losses are pre-harvest shattering loss, cutter bar loss and more breakage of grain. At low moisture the straw is broken finely by the cylinder and more material flows to the sieve resulting into separation problem. There is a risk of natural hazards like rain and hailstorm, which also leads to lodging of crop.

Due to delay in harvesting, more weed growth takes place that causes choking of combine. At high moisture content, grains are badly damaged by the cylinder action. The threshing is poor and good cleaning is also a problem. This leads to higher cylinder loss and lower cleaning efficiency. The grains get struck to moist straw and are carried away with straw and chaff. There might be choking problem at different stages in the combine due to high moisture content. As per BIS the combine losses should be maximum 2.5% for wheat, paddy and gram and 4.0% for soybean (IS: 8122 Part II – 1981).

Pre-harvest loss: It is determined at minimum of three places randomly selected in the field where combine harvester is to be operated. The sample should be collected from the area having one-meter length in the direction of travel and full or half width of cutter bar of machine depending upon its size. All the loose grains, complete and incomplete ear heads fallen in the marked area have to be picked up manually without vibrating the plants before the machine is to be operated. This will give pre-harvest loss.

Header loss: It is determined on those portions of ground, which are protected from combine afflux by the use of rolls of cloth. The loose grains and complete and incomplete ear heads fallen on the marked area, where pre-harvest losses were determined, shall be collected manually. This gives the header loss. It is also called cutter bar loss.

$$\text{Header Loss (\%)} = \frac{\text{Grain collected from 1 m}^2\text{ area after harvest – grain Collected from same area before harvest}}{\text{Gross Yield}} \times 100$$

$$\textbf{Cylinder Loss (\%)} = \frac{\text{Unthreshed grain collected from straw rack \& sieve}}{\text{Gross Yield}} \times 100$$

Rack and shoe loss: For determining the rack and shoe loss, the straw and chaff afflux is collected separately. To collect these, two rolls of cloth 30 m in length and one and half times the width of straw/chaff outlet is suspended on especially attached fittings beneath the rear of machine. As the sheets of cloth unroll, one sheet retains the afflux from straw walker and other from sieve for 20 m run length. Unrolling operation starts 5 m in advance and terminates 5 m ahead of end point.

$$\text{Rack Loss (\%)} = \frac{\text{Free grain collected from straw rack sample}}{\text{Gross Yield}} \times 100$$

$$\text{Sieve Loss (\%)} = \frac{\text{Free grain collected from sieve sample}}{\text{Gross Yield}} \times 100$$

Grain crackage: It is determined from the samples taken from grain tank. Only visible damaged grains are separated and expressed in percentage of sample taken.

$$\text{Grain Crackage (\%)} = \frac{\text{Damaged grain wholly or partially collected from sample}}{\text{Gross Yield}} \times 100$$

Net Yield = Grain collected in the bag from combine test area.

Gross Yield = Net yield + header loss + cylinder loss + rack loss + sieve loss

Total combine loss = Cutter bar loss + cylinder loss + rack loss + sieve loss

$$\text{Performance efficiency, \%} = \frac{\text{Net yield}}{\text{Gross yield}} \times 100$$

$$\text{Unthreshed (\%)} = \frac{\text{Unthreshed grain in tank + cylinder loss}}{\text{Gross Yield}} \times 100$$

$$\text{Cleaning efficiency, \%} = \frac{\text{Clean grain}}{\text{Total grain collected from main outlet}} \times 100$$

$$\text{Threshing efficiency, \%} = \frac{\text{Threshed grain from all outlets}}{\text{Grain output in tank}} \times 100$$

Expected range of losses: Losses, with the best combine adjustments, will vary greatly depending upon the type‟s variety and the condition of the crop. Total losses in clean crop of wheat oats and barley will vary from 1% to 4% of total yield. Under good harvesting condition the total loss should not be more than 1.5%.

(i) Cutter bar loss - 0.5 to 2%

(ii) Cylinder loss - 0.5 to 1%

(iii) Rack loss - 0.2 to 0.4%

(iv) Shoe loss - 0.2 to 0.4%

The losses could be minimized by running the combine at proper adjustment. Setting and performance of different parameters are discussed below:

Cutting and conveying: The height of cut can be adjusted from 5 cm to 75 cm in most of the combines. The rate of feeding can be adjusted by manipulating height of cut and forward speed of machine. Forward speed range of 2.5 - 4.5 km/h for standing crop and 1 - 1.5 km/h for lodged crop has been recommended by ISI. The speed of cutter bar varies from 400 to 550 rpm.

Reel adjustment (ISI): The horizontal positioning should be such that real bats have a distance of 50 to 100 mm in front of the cutter bar. The optimum value of reel index should be 1.10 to 1.25.

Problem 1: A combine was tested for harvesting jowar and following observations were recorded:

Total area harvested = 78 sq. m.

Total time required = 65 seconds.

Total material left over the rack =18 kg.

Free seed over the rack =150 gms.

Unthreshed seed over the rack = 120 gms.

Free seed over the shoe = 530 gms.

Unthreshed seed over shoe = 150 gms.

Total material left over shoes = 8 kg.

Net grain collected in the tank = 34 kg.

Calculate:

1. Seed yield and total loss in kg/hectare.
2. Cylinder loss, rack loss, shoe loss and total grain loss as percent of total yield.
3. Total feed rate in kg/hour.
4. Rates of straw and chaff over the rack and over the shoe in kg/hr.
5. Percentage of straw and chaff retained by r4ack.

Solution:

Total area harvested = 78 m^2
Total seed harvested =

So, seed yield = kg/hectare = kg/ha
Total seed loss = kg/ha

Cylinder loss is the un-threshed seed discharged from the rear of the machine, either in the straw or in the material from the cleaning unit.

Total un-threshed seed = g Total
cylinder loss =
Rack loss is the free threshed seed carried over the rack in the straw and discharged from the machine.
So, rack loss =
Shoe loss is the loss of free seed carried over the rack in the straw and discharged from the machine.
So, shoe loss =
Total loss of seed =

Total material fed including seed and straw =

So, feed rate = kg/h

Over the rack total material is 18 kg. Out of which free seed is 150 gm and un-threshed seed is 120 gm. So, net weight of straw in rack is

=

Rate of straw over rack =

Similarly net weight of straw over shoe =

So, rate of straw over shoe =

Percentage of straw and chaff retained on rack =

Basic Machine Settings

Type of crop	Drumspeed	Concave clearance	Sieves	Straw walker
	(rpm)			(rpm)
Wheat	900-1000 -	Front - 15mm	Upper - 16 -19mm	200
		Rear - 7mm	Lower - 6 to 8mm	
Paddy	600-800 "	Front - 17mm	Upper - 16 -19mm	180
		Rear - 14mm	Lower - 5 to 6mm	
Sunflower	*400-650	Front - 17mm	Upper-12.5-19mm	200
		Rear - 14mm	Lower-8mm Øhole	
Soybean	*250-600	Front - 15mm	Upper - 16 -19mm	200
		Rear - 11mm	Lower-8mm Øhole	
Mustard	*450-700	Front - 10mm	Upper - 16 -19mm	200
		Rear - 5mm '	Lower - 4 to 5mm	
Gram	*450 - 700 •.	Front - 15mm	Upper - 16 -19mm	200
		Rear - Ilmm	Lower- 7 to 10mm	

Source: Operator's Manual of Swaraj 8100 Combine

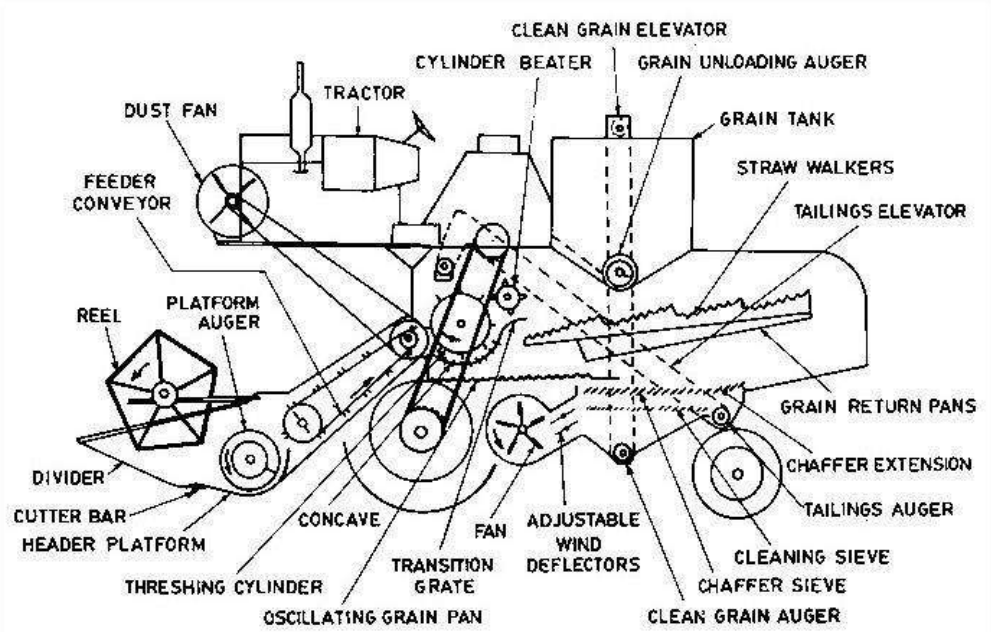

Fig. 4: Details of a tractor operated combine harvester.

Activate Window
Go to PC settings to ac

VIVA QUESTIONS

1. How do you check the hydraulic fluid level in a tractor?
A: Locate the hydraulic fluid reservoir, check the level against the dipstick or sight glass, and top up as needed.

2. What is the purpose of the air filter in a tractor engine?
A: The air filter prevents dust and debris from entering the engine, reducing wear and improving performance.

3. How do you adjust the belt tension on a tractor?
A: Use a belt tension gauge to check the tension, and adjust the belt tightener or idler pulley as needed.

4. What are the common causes of tractor tire wear?
A: Improper tire pressure, overloading, and uneven wear patterns can cause tire wear.

5. How do you troubleshoot a faulty tractor starter motor?
A: Check the battery voltage, starter motor connections, and solenoid wiring. Test the starter motor and replace if necessary.

6. What is the purpose of the fuel filter in a tractor engine?
A: The fuel filter removes contaminants and debris from the fuel, protecting the engine from damage.

7. How do you check the tractor's battery voltage?
A: Use a multimeter to measure the battery voltage, ensuring it is within the recommended range.

8. What are the safety precautions when working with tractor hydraulics?
A: Ensure the hydraulic system is depressurized, wear protective gear, and follow proper lockout/tagout procedures.

9. How do you adjust the combine harvester's threshing drum speed?
A: Adjust the speed according to crop conditions, ensuring optimal threshing and grain separation.

10. What are the common issues with tractor transmission systems?
A: Issues like worn-out gears, faulty synchronizers, and low transmission fluid levels can cause transmission problems.

11. How do you perform a daily inspection on a tractor?
A: Check oil and fuel levels, tire pressure, brakes, and hydraulic fluid. Look for leaks and damage. Ensure all lights and signals are working.

12. What is the procedure for attaching a PTO-driven implement to a tractor?
A: Align the PTO shaft, engage the clutch, and secure the implement. Ensure proper shielding and safety precautions.

13. How do you troubleshoot a tractor's hydraulic system?
A: Check fluid levels, look for leaks, and inspect filters. Check for blockages and worn-out seals.

14. How do you adjust the depth and angle of a moldboard plough?
A: Adjust the down pressure, angle of attack, and pitch to achieve desired depth and soil turnover.

15. What are the common problems encountered during ploughing, and how do you address them?
A: Issues like soil compaction, uneven depth, and clogging. Adjust speed, depth, and angle to mitigate these issues.

16. How do you maintain a disc harrow?
A: Regularly inspect and replace worn-out discs, lubricate bearings, and adjust tension.

17. How do you adjust the combine harvester's cutting height and reel speed?
A: Adjust the header height and reel speed to match crop conditions, ensuring optimal cutting and grain collection.

18. What are the common issues encountered during combine harvesting, and how do you troubleshoot them?
A: Issues like grain loss, poor separation, and clogging. Adjust settings, clean components, and ensure proper maintenance.

19. How do you calibrate a combine harvester's moisture sensor?
A: Follow manufacturer guidelines, ensuring accurate moisture readings for optimal grain storage.

20. How do you perform a compression test on a diesel engine?
A: Use a compression gauge, following manufacturer guidelines, to diagnose engine health.

21. What are the common causes of engine overheating, and how do you address them?
A: Issues like low coolant, faulty

22. What is the advantage of using a diesel engine in tractors?
A: Diesel engines provide more torque and fuel efficiency.

23. What is the purpose of the power take-off (PTO) shaft?
A: The PTO shaft transmits power from the tractor to attached implements.

24. What are the types of ploughs?
A: Moldboard plough, disc plough, and chisel plough.

25. What is the function of the seed drill?
A: A seed drill sows seeds at the correct depth and spacing.