SRM VALLIAMMAI ENGINEERING COLLEGE

(An Autonomous Institution)

SRM Nagar, Kattankulathur – 603203.

Department of Agricultural Engineering

LABORATORY MANUAL

(2023 Regulation)

SEMESTER	**: VII**
SUBJECTCODE	**: AG3763**
SUBJECT NAME	**: Food Process Engineering Laboratory**
ACADEMIC YEAR	**: 2026 -27 ODD SEMESTER**

Prepared by,

Dr.N.Vairam, Assistant Professor/Agri

AG3763 **FOOD PROCESS ENGINEERING LABORATORY** **L T P C**

0 0 3 1.5

OBJECTIVES:

- To get basic knowledge on various properties of food.
- To gets hand on experience on food process technology.
- To get knowledge on food adulteration.
- To determine the properties of various food materials.
- To visit food processing and dairy industry.

LIST OF EXPERIMENTS

1. Determination of cooking properties of parboiled and raw rice.

2. Estimation of microbial load in food materials.

3. Determination of rehydration ratio of dehydrated foods.

4. Experiment on osmotic dehydration of foods.

5. Experiment of food extruder.

6. Experiment on properties of food through microwave oven heating.

7. Determination of properties of milk.

8. Experiments on cream separator to determine the separation efficiency.

9. Experiments on construction and operation of butter churner and accessories.

10. Experiments on detection of Food Adulteration.

11. Experiments on estimation of protein in food.

12. Experiment on expansion and Oil absorption characteristic of snacks on frying.

13. The lab includes visit to food processing and dairy industry

TOTAL: 30 PERIODS

INDEX

Ex. No.	Date	Title of the Experiment	Page No.	Completed Date	Teacher's Initials	Mark
1.		Determination of cooking properties of parboiled and raw rice				
2.		Estimation of microbial load in food materials				
3.		Determination of rehydration ratio of dehydrated foods				
4.		Experiment on osmotic dehydration of foods				
5.		Experiment of food extruder				
6.		Experiment on properties of food through microwave oven heating				
7.		Determination of properties of milk				
8.		Experiments on cream separator to determine the separation efficiency				
9.		Experiments on construction and operation of butter churner and accessories				
10.		Experiments on detection of Food Adulteration				
11.		Experiments on estimation of protein in food				
12.		Experiment on expansion and Oil absorption characteristic of snacks on frying				
13.		The lab includes visit to food processing and dairy industry				

Experiment 1 DETERMINATION OF COOKING PROPERTIES OF PARBOILED AND RAW RICE

Introduction:

Parboiling is the pregelatinization of rice within its husk. In Parboiling process, paddy is steeped, steamed and dried before milling. Parboiling results in significant changes in the physico-chemical and cooking characteristics of rice grain. Parboiling fills the void spaces and cements the cracks inside the endosperm, making the grain harder and minimizing internal fissuring and thereby breakage during milling.

Aim: To determine the cooking properties of parboiled and raw rice.

Materials required:

Parboiled and raw rice samples
Digital vernier caliper
Digital water activity meter
Glass beaker
Heating mantle
Weighing balance

Procedure:

1. Water absorption and volume expansion

Fifty (50) grams each of the parboiled and non-parboiled milled rice samples were weighed and placed in a 250 mL capacity glass beaker. The height of the samples in a beaker without water was measured using a foot rule. Samples were cooked in a heating mantle. After cooking, the cooked sample with the beaker was weighed and the height of the cooked sample was measured. Water absorption and volume expansion of the cooked samples were calculated using the following formula:

$$\text{Water absorption} = \frac{\text{Weight of cooked rice} - \text{weight of raw rice}}{\text{Weight of raw rice}} \text{ x } 100$$

$$\text{Volume Expansion} = \frac{\text{Height of cooked rice} - \text{Height of raw rice}}{\text{Height of raw rice}} \text{ x } 100$$

2. Grain elongation ratio

Fifteen grains were randomly selected from parboiled and raw cooked rice

The length of the cooked and un-cooked grains were measured using a digital vernier caliper. Grain elongation ratio was calculated using the formula:

$$\text{Elongation Ratio} = \frac{\text{Length of cooked rice}}{\text{Length of raw rice}}$$

3. Water activity

The water activity of the cooked parboiled and non-parboiled milled rice was measured using a digital water activity meter

RESULTS:

Some of the cooking properties of parboiled and raw rice were determined.

Observation :

Empty weight of the beaker	-
Weight of the raw rice	-
Weight of the cooked raw rice	-
Weight of the parboiled rice	-
Weight of the cooked parboiled rice	-
Height of the raw rice	-
Height of the cooked raw rice	-
Height of the parboiled rice	-
Height of the cooked parboiled rice	-

1. Water absorption –
2. Volume expansion -

3. Elongation ratio of cooked parboiled rice – 1.45
Elongation ratio of cooked milled rice - 1.25

4. Water activity of cooked parboiled rice = 0.76
Water activity of cooked milled rice = 0.65

EXPERIMENT 2 STUDY ON THE ESTIMATION OF MICROBIAL LOAD IN FOOD MATERIALS

Introduction:

Aim: To study the estimation of microbial load in food materials

Materials required:

- Autoclave
- Weighing balance
- Blenders
- Bunsen burner
- Glass test tubes, test tube racks
- Non adsorbant cotton
- Petri plates
- Pipette
- Laminar flow chamber

Procedure:

Sterilize all the required glasswares like test tube, petriplates, conical flask with media, pipette in the autoclave.

Make 1:10 dilution of the well mixed sample by aseptically transferring the sample to the desired volume of diluent.

Measure viscous or non viscous liquid samples with the appropriate volume of diluent (11ml to 99ml or 10 to 90ml or 50 to 450 ml). Solid samples (50g) are mixed with dilute(450 ml) and blended for 2 min.

Aerobic Mesophilic plate count

Indicates microbial counts for quality assessment of foods

Medium:

- Plate count agar,
- Peptone water 0.1%,
- (Chapter 2 for composition of medium)

Procedure:

Preparation of food homogenate

Make a 1:10 dilution of the well mixed sample, by aseptically transferring sample to the desired volume of diluents.

Measure non-viscous liquid samples (i.e., viscosity not greater than milk) volumetrically and mix thoroughly with the appropriate volume of diluent (11 ml into 99 ml, or 10 ml into 90 ml or 50ml into 450 ml).

Weigh viscous liquid sample and mix thoroughly with the appropriate volume of diluent (11 + 0.1g into

99ml; 10+ 0.1g into 90ml or 50+0.1g into 450ml).
Weigh 50+0.1g of solid or semi-solid sample into a sterile blender jar or into a stomacher bag. Add 450 ml of diluent. Blend for 2 minutes at low speed (approximately 8000 rpm) or mix in the stomacher for 30-60 seconds.

Powdered samples may be weighed and directly mixed with the diluent. Shake vigorously (50 times through 30 cm arc).
In most of the food samples particulate matter floats in the dilution water. In such cases allow the particles to settle for two to three minutes and then draw the diluent from that portion of dilution where food particles are minimum and proceed.

Dilution:
If the count is expected to be more than 2.5 $x10^3$ per ml or g, prepare decimal dilutions as follows. Shake each dilution 25 times in 30 cm arc. For each dilution use fresh sterile pipette. Alternately use auto pipette. Pipette 1 ml of food homogenate into a tube containing 9 ml of the diluent. From the first dilution transfer 1 ml to second dilution tube containing 9ml of the diluent. Repeat using a third, fourth or more tubes until the desired dilution is obtained.

Pour plating:
Label all petriplates with the sample number, dilution, date and any other desired information. Pipette 1 ml of the food homogenate and of such dilutions which have been selected for plating into a petri dish in duplicate. Pour into each petri dish 10 to 12ml of the molten PCA (cooled to 42-45°C) within 15 min from the time of preparation of original dilution. Mix the media and dilutions by swirling gently clockwise, anti-clockwise, to and fro thrice and taking care that the contents do not touch the lid. Allow to set.

Incubation:
Incubate the prepared dishes, inverted at 35°C for 48+2 hours. (Or the desired temperature as per food regulation e.g. in case of packaged drinking
water).

Counting Colonies:
Following incubation count all colonies on dishes containing 30-300 colonies and record the results per dilution counted.

Calculation
In dishes which contain 30-300 colonies count the actual number in both plates of a dilution and as per the formula given below:

$$N = \Sigma / (N + .)$$

C is the sum of colonies counted on all the dishes retained

N1 is the no. of dishes retained in the first dilution

N2 is the no of dishes retained in the second dilution

D is the dilution factor corresponding to first dilution

E.g. At the first dilution retained (10^{-2}):165 & 218 colonies

At the second dilution retained (10^{-3}) 15 & 24
N= 165+218+15+24/ [2+ (0.1x2) x 10x-2]
= 422/0.022
= 19182
Rounding the result to first two digits gives 19000 CFU.

Expression of Result

Aerobic (Mesophilic) Plate Count = 19000 CFU/g or 1.9x10* CFU/g
or
If plates from all dilutions have no colonies and inhibitory substances have not been detected, the result is expressed as less than 1 x 10^1 CFU per g or ml.

If plates from the lowest dilutions contain less than 30 colonies, record the actual number and calculate as above but express results as CFU per g or ml.
Note:- This method, as all other methods, has some limitations. Microbial cells often occur as clumps, clusters, chains or pairs in foods, and may not be well distributed irrespective of the mixing and dilution of the sample. Moreover the single agar medium used, the conditions of incubation, aeration etc., are not conducive to the growth of various populations of bacteria that may be present in a food sample.

For statistical reasons alone, in 95% of cases the confidence limits of this test vary from ±12% to ±37%. In practice even greater variation may be found specially among results obtained by different microbiologists.

Plate Count Agar (PCA) (Standard Methods Agar) (TGE Agar)

Dehydrated yeast extract ..... 2.5 g
Pancreatic digest of casein (Tryptone)..... 5.0 g
Glucose..... 1.0 g
Agar ..... 15-18 g
Distilled water ..... 1.0 liter

Adjust pH to 7.0±0.1 dispense in 15 ml portions in tubes or flasks. Sterilise for 15 min at 121 deg C. before use melt the medium completely in boiling waterand keep the tubes or flaks in water bath at 45 to 48°C.

Label all petriplates with the sample number, dilution,date and any other desired information. Pipette 1ml of the food homogenate of various dilution into the petri dish. Pour 10 – 12 ml of PCA into each petri dish. Mix the media and dilutions by swirling gently. Allow to set.

Result :

The estimation of microbial load in food materials were studied.

EXPERIMENT 3 DETERMINATION OF REHYDRATION RATIO OF DEHYDRATED FOODS

Introduction:

Rehydration means refreshing the dehydrated or dried products in water.

Aim: To determine the rehydration ratio of dehydrated foods

Materials required:

- Dried sample
- Glass beaker
- Weighing balance
- Heating mantle
- Filter paper
- Funnel

Procedure:

- Pour 5g of dried grapes with 150 ml of water into 250ml beaker.
- Allow the sample for pre-soaking for 50 to 60 min.
- Transfer the sample to another beaker of 150 ml boiling water.
- Note the time till the liquid portion drains out.
- Transfer the solid content to a funnel with filter paper.
- Drain the excess water and weigh the material.
- Rehydration ratio is calculated from the formula given below

$$\text{Rehydration ratio} = \frac{\text{Weight of rehydrated material}}{\text{Weight of dehydrated material}}$$

Result :

The rehydration ratio of dehydrated food was determined.

Observation :

Weight of dehydrated grapes - 5g

Weight of rehydrated grapes - 7.85g

Rehydration ratio = 1.57

Experiment 4 EXPERIMENT OF OSMOTIC DEHYDRATION OF FOODS

Introduction:

Osmotic dehydration is used for partial removal of water from materials such as fruits and vegetables by immersing in aqueous solutions of high osmotic pressure such as sugar and salts. It helps in reducing the damage of heat to the flavor, color, inhibiting the browning of enzymes and decreases the energy costs.

Aim: To conduct an experiment on osmotic dehydration of foods

Principle:

The principle involved is osmosis, Osmosis involves the passage of a solvent from a less concentrated to a more concentrated solution through a membrane.

Materials required:

- Food sample
- Cabinet drier
- Sugar
- 1% sodium metabisulphite

Procedure :

- Peel and cut the banana slices to 5mm thickness .
- Prepare 67% sucrose solution consisting of 67g of sugar in 100 ml of water. Immerse the banana slices in sucrose solution for 18 hours. Weigh the product after immersion.
- Prepare 60% sugar solution with 1% sodium metabisulphite. Again immerse the sample for another 1 hour.
- The slices are finally rinsed in cold water to remove the stickiness.
- The Product is now dried in cabinet drier at 48 degC, 50% RH for 18 hours.
- Determine the moisture content of the final product.

Result:

Osmotic dehydration of a food sample was conducted through experiment.

Observation:

Initial weight of the sample -

Final weight of the sample after dehydration -

Moisture content (w.b) = (moisture content of the sample / initial weight of the sample)*100

Moisture content (d.b) = (moisture content of the sample /dry weight of the sample)*100

Experiment 5 EXPERIMENT ON FOOD EXTRUDER

Aim: To conduct an experiment on food extruder.

Materials required:

Rice flour
Weighing balance
Extruder

Theory:

It is a high temperature short time process, which reduces microbial contamination and inactivates the enzyme. It combines several unit operations like mixing, cooking, shearing and forming. It causes a lot of structural changes in food including hydration of starches, gelation, shearing, melting of fats, denaturation and re–orientation of proteins. Extruders are classified according to the method of operations as:

a) Cold extruder and b) extruder cooker.

Method of construction as:

a) Single screw and b) twin screw extruder.

Single screw extruder is divided into feeding, transition and metering section. In the feeding section, the material is fed from a hopper. It consists of a screw barrel arrangement where a self-driven screw forces the product through the extruder.

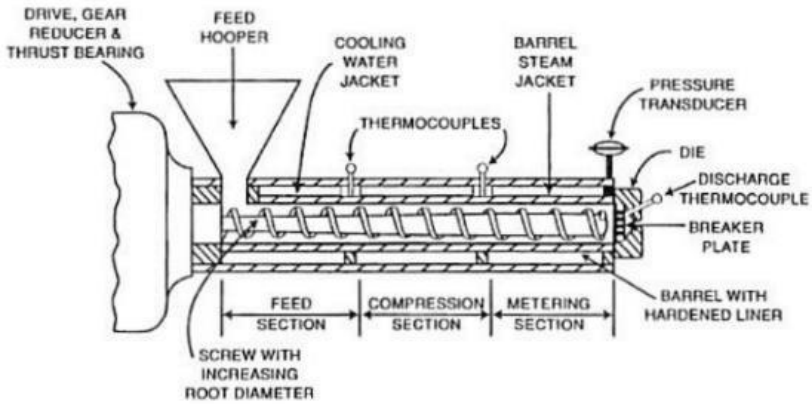

In the transition or compression section the raw material is plasticized as the mixture is heated by mechanical friction and heat transfer from the walls of the barrel. Dramatic physical and chemical changes and a mixing effect take place in this section. Parameters affecting screw's performance are ratio of the length to diameter, compression ratio, pitch height and clearance between the screw and barrel.

Next is the metering section, where highest pressure is obtained. Energy supplied from the pump is used in building pressure against a die located at the product exit. The die plays a role in shaping the final product and provides a sudden expansion by evaporating some of the water trapped in the food matrix. The product properties like elasticity, hardness, hydration ability, density etc may be affected by process

parameters(pressure and temperature profile, mixing, moisture correction, chamber filling) and feed supply properties(choice of material, moisture and fat content, particle size distribution and rheology).

Procedure :

- 500gm of Rice flour was taken and conditioned for 30 minutes to reach 15% moisture content.
- Electonic panel adjustments were made and the temperature was fixed at 110◦C.
- Conditioned sample was fed into the screw barrel arrangement of the extruder.
- The feed is converted into a highly porous material with very low density.
- Blades are provided near die to cut the extrudate into required length.

Result:

Experiment on food extruder was conducted.

Experiment 6 EXPERIMENT ON PROPERTIES OF FOOD THROUGH MICROWAVE OVEN HEATING

AIM: To study the working principle of microwave and drying of carrot slices at different power levels.

Materials required:

- Microwave oven
- Carrot slices
- Weighing balance

Principle:

The polar molecules like water and ionic salts orient randomly and align themselves upon application of electromagnetic waves rapidly, which creates molecular friction by which heat is produced.

Theory: A Typical microwave oven consists of following major components:

Power supply: It is used to draw electric power from the line and convert it to high voltage , required by magnetron.

Magnetron: It is capable of converting power supplied into microwave energy and emits high frequency energy.

Transmission section: they transfer the generated energy from the magnetron to oven cavity.

Stirrer: The stirrer is usually a fan shaped distributor that rotates and scatters the transmitted energy throughout oven.

Oven cavity: It encloses the food to be heated with metallic walls. The distributed energy from the stirrer is reflected by walls & intercepted by food from many directions with more or less uniform energy.

Procedure:

- The carrots were cleaned and sliced into pieces of uniform thickness.
- Note the initial weight of carrot.
- Samples were blanched in hot water (70◦C) for 2 min and weighed.
- Blanched samples were spread over a microwave oven plate and kept in oven cavity.
- Samples were dried at different power levels of 40,50 and 60Hz for a period of 1 minute.
- The process was repeated till the moisture loss becomes almost equal.
- Drying rate with respect to time was plotted in graph for different power levels.

Result:

Drying of food materials at different power levels were studied using microwave oven heating.

Observation:

Time (a), min	Weight, g		Moisture content(b)	Drying rate, g/min (b/a)
	intial	final		

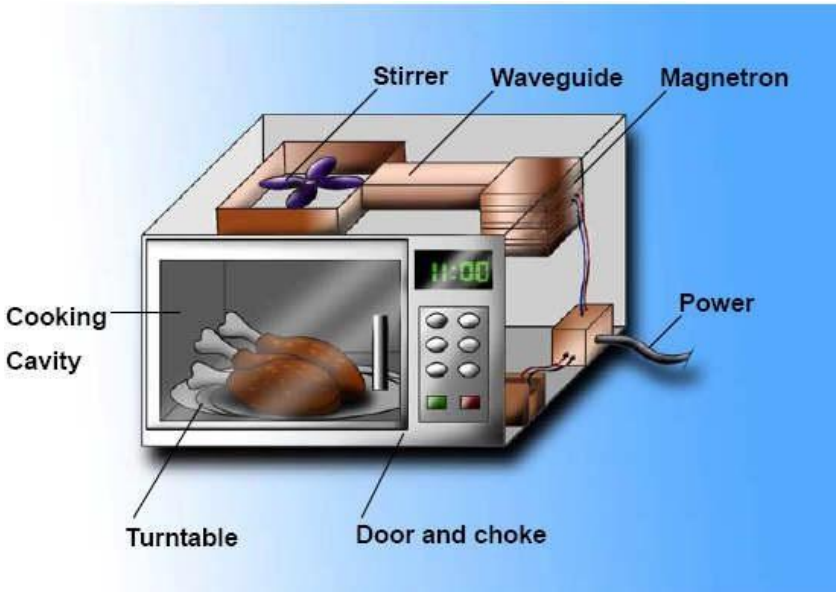

Experiment 7

DETERMINATION OF PROPERTIES OF MILK

AIM:

To determine some of the physical properties of milk.

Introduction:

The knowledge of different properties of milk is required to design the processing and storage structures for milk**.** The physical properties of milk include density, acidity, viscosity, surface tension, colour, flavor, boiling and freezing point. Some of these properties are determined in this experiment.

1. **Density and specific gravity**

Lactometer (or galactometer) is a hydrometer used to test milk. The lactometer is based on the principle that a freely floating body displaces a quantity of liquid of the same weight as the floating body.

Quevenne is an arbitrary scale used with lactometers in the determination of the specific gravity of milk.

Materials Required:

- Milk sample
- Lactometer
- Measuring cylinder
- Dairy thermometer

Procedure:

- The milk must be kept cold at 40-50°F.
- Mix the milk thoroughly to a homogenous mixture.
- Pour the milk into a measuring cylinder.
- Milk was filled till the surface and made sure there are no bubble formation.
- Reading were marked from the lactometer.

specific gravity = (Quevenne reading /1000)+1

Milk is heavier than water. The specific gravity of cow milk varies from 1.018 to 1.036 and of buffalo milk from 1.018 to 1.038. Though specific gravity varies with temperature, (lower at higher temperature and vice versa), the rate of this variation is not uniform.

The density of milk varies within the range of 1.027 to 1.033 kg/cm3 at 20°C. The density of milk is used to estimate the solids content, to convert volume into mass and vice versa and to calculate other physical properties such as dynamic viscosity. It is dependant on temperature at the time of measurement, temperature history of the sample, composition of the sample (particularly fat content) and inclusion of air.

2. Total solids and total SNF

The total solids and solids not fat (SNF) are determined as follows (Gerber method).
Percentage total solids = 0.25 D +1.22 F+0.72
Percentage SNF = 0.25 D +0.22 F+0.72,

In the above equations, D=1000(d-1), where d= specific gravity of sample of milk at 20°C, and F is the fat percentage in sample.

3. TITRABLE ACIDITY:

The titrable acidity test is employed to ascertain if milk is of such a high acidity as to reduce its keeping quality and heat stability.

Materials required:

- Conical flask
- Pipette
- Burette with soda lime guard tube
- Measuring cylinder
- Stirring glass rod flattened at one end
- 0.1N NaOH
- Phenophthalein indicator solution

Procedure:

- 10ml well mixed sample of milk or fluid milk were taken in conical flask.
- 1ml of the phenolphthalein indicator were added to the flask.
- The contents were titrated against standard sodium hydroxide solution by adding drop by drop from the burette till the appearance of pink colour.
- Stir vigorously throughout. Complete the titration within 20 seconds.

Observation:

Titrable acidity as % lactic acid per 100 ml of milk = $0.9 \times V1 \times N1/V2$

Where,

V1 = Volume in ml of standard NaOH solution used for titration

N = Normality of standard NaOH solution

V2 = Volume in ml of milk taken for titration

4. pH

It determines whether a product is acid or base.

Materials Required:

- pH meter with glass and calomel electrodes
- Buffer solutions of pH 7.0 and pH 9.0 or 4.0
- Beaker 100 ml
- Glass rod

Procedure:

- The pH meter was Standardized with pH 7.0 buffer solutions and checked against another buffer of pH 9.0 or 4.0.
- After calibration 50 ml sample of well mixed milk was taken in a 100 ml beaker
- pH was read at 20ºC.

Freshly drawn milk has a pH value in the range of 6.5 to 6.7 and contains 0.14 to 0.18% titratable acid calculated as lactic acid. There is no developed acidity in freshly drawn milk, the slightly lower than the neutral pH being attributed to the presence of carbon dioxide, citrate, casein etc.

5. VISCOSITY

The viscosity of a substance refers to, its resistance of flow. It is a measure of the friction between molecules as they slide past one another.

Materials Required:

- Milk sample
- Coaxial double cylinder type rotational viscometer

Procedure:

It consists of inner and outer cylinder. Liquid is passed into the gap between the two cylinders.
Outer cylinder is made to rotate at a constant angular velocity ω, inner cylinder follows to rotate due to the viscosity of the liquid. Torque T is generated by the force of rotation. Viscosity is determined from the following equation,

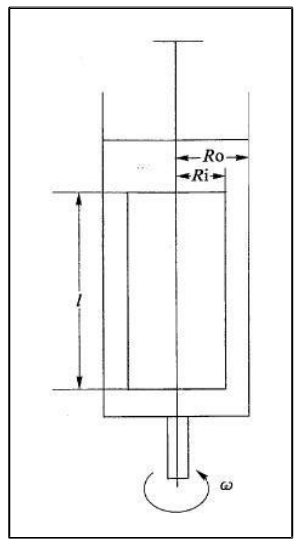

$$\eta = \frac{100T}{4\pi l\omega}\left[\frac{1}{R_i^2} - \frac{1}{R_o^2}\right]$$

where, η: viscosity of a liquid (mPa·s)
π: circumference/diameter ratio
l: length of the inner cylinder (cm)
ω: angular velocity (rad/s)
T: torque acting on cylinder surface (10^{-7} N·m)
R_i: 1/2 of outer diameter of the inner cylinder (cm)
R_o: 1/2 of inner diameter of the outer cylinder (cm)

Viscosity of milk depends on the temperature and the amount and state of dispersion of the solid constituents, mainly casein and fat. Viscosity of the whole milk at 25°C is about 2.0 cP. Cooler temperatures increase viscosity due to the increased voluminosity of casein micelles whereas temperatures above 65°C increase viscosity due to the denaturation of whey proteins. An increase or decrease in pH of milk also causes an increase in casein micelle voluminosity. The effect of agitation on viscosity is not uniform. Sometimes, agitation causes partial coalescence of the fat globules, hence increasing the viscosity and at other times, agitation may disperse fat globules that have undergone cold agglutination, leading to a decrease in viscosity.

6. Freezing and boiling points of milk

The freezing points of cow and buffalo milk vary from -0.512 to -0.572ºC and from -0.521 to -0.575ºC respectively. Freezing point of milk is mainly used to determine added water. The boiling point of milk is 100.17ºC.

RESULT:

some of the properties of milk were determined.

Experiment 8	**Experiment on cream separator to determine the separation efficiency**

Aim: To study the components of cream separator and estimation of separation efficiency.

Materials required:

- Cream separator,
- Stainless steel / plastic buckets ,
- Weighingbalance,
- Thermometer,
- Milk strainer,
- Sampling bottles,
- Fat testing set

Principle:

When milk is subjected to gravitational or centrifugal force, fat being lighter, separates out from the milk serum. Thus, milk is divided into low density cream and high density skim milk.

Theory:

When milk is allowed to enter the separator at controlled speed by the float, milk flows down through the central inlet of the axis and is uniformly distributed by the milk distributor. Denser skim milk towards periphery and lighter cream at the center builds up as two columns separated by thin zone of diffusing composition. At the level with the upper disc, skim milk outlet is located and skim milk is collected through skim milk spout. The cream still moves upwards and drains off through the cream outlet cum screw in to cream spout.

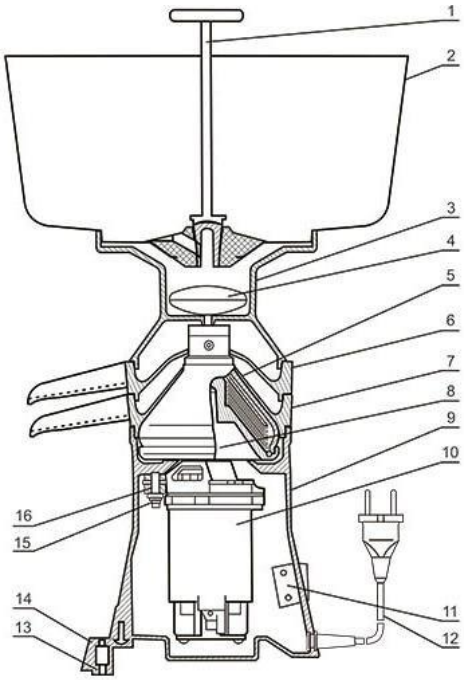

1 - stopper, 2 – milk receiver/bowl, 3 – float chamber, 4 -float, 5 – drum/top bowl,6 – cream receiver, 7 – skim milk receiver, 8 – baffler, 9 – body,
10 – electric motor/engine, 11 – switch, 12 – main/plug, 13 – bushing, 14 – support, 15 – nut, 16 – bushing

Procedure:

- Weigh the milk to be separated
- Warm the milk to 40°C
- Take a sample of milk for acidity and fat testing
- Pour warm milk in the supply tank after straining
- Maintain the rated speed of bowl and allow milk to run through separator to start separation
- Note time when separation started
- Collect cream and skim milk separately in clean and dry cans of known weight
- When all the milk has been separated, pour about 1 litre warm and clean water slowly over the float
- Stop the separator and note the time
- Find out the net weight of cream and skim milk
- Take representative samples of cream and skim milk

Determination of fat content:

- Use the 10 ml acid pipette to transfer 10 ml of sulphuric acid into the butyrometer.
- Fill the 10.75 ml pipette with milk and deliver the sample into butyrometer.
- Add 1 ml of amyl alcohol and close.
- Put it in the centrifuge, placing two butyrometers diametrically opposite, centrifuge at a maximum speed for 4 minutes.
- Transfer the butyrometers, stoppers downwards into water bath for 3-10 minutes.
- Bring lower end of fat column on to a main graduation mark by slightly withdrawing stopper. Note the fat content.

Result:

Components of cream separator and estimation of separation efficiency were studied.

Observation:

a) Fat in milk %
b) Fat in cream %
c) Total fat in cream g.
d) Fat in skim milk %
e) Total fat in skim milk g

$$\text{Skimming Efficiency (\%)} = \frac{\text{Total fat in cream}}{\text{Total fat in milk}} \times 100$$

$$\text{Fat loss in skim milk} = \frac{\text{Total fat in skim milk}}{\text{Total fat in milk}} \times 100$$

Gerber tube (butyrometer)

Centrifuge for Gerber method

Sulphuric acid

Iso-amyl alcohol

Pipette

BUTYROMETER

EXPERIMENT 9: CONSTRUCTION AND OPERATION OF BUTTER CHURNER AND ACCESSORIES

Introduciton

Butter churn is a device for making butter. It has evolved in various phases and has undergone several modifications starting from earthen pots to continuous machine. Modern butter churns are large barrel shaped revolving containers madeof stainless steel. Cream is placed in these devices and agitated until it is converted into butter granules. The constructional material and the design of butter churn influence the quality of butter and the losses of fat in butter-milk.

Aim:

- To study the constructional features and operation of power butter churn
- To get familiar with preparation of butter churn for churning cream to butter

Materials/Equipment's required

Metal churn, cream strainer, platform balance, butter moisture balance withaccessories, fat and acid testing set along with standard solution, sampling bottleand sampling device, thermometer, butter-trier, butter colour and butter salt, goodquality chilled water and cream

Procedure

a) Constructional features

Type of churn: Hand/ Power operated

i) Metal/wooden

ii) Cylindrical/Conical

iii) Roller type/Roll-less-type

iv) Front opening/Side opening

b) Operation of butter churn

- Run scalding water into the churn at 90- 95°C till it is one fifth full.
- Revolve the churn for about 15 min.
- Stop the churn and run off the scalding water
- Run cold water into the churn at 5°C so as to fill the churn one fifth; and chlorinesolution to make up a concentration of 100 ppm.
- Revolve the churn with cold water for 10 min.
- Stop the churn and drain the chilled water completely.
- Open the inlet of chilled water to the inside vanes.
- Fix the cream strainer to the end of the cream delivery pipe and insert it intochurn through cream filling valve.
- Take a representative sample of the cream and determine its acidity and fatcontent.
- Note the temperature of cream and start pumping cream into the churn till it isfull.

- Revolve the churn after noting the time it was started
- Ventilate the cream, a few times, during early stage of churning.
- Revolve the churn until the butter breaks and grains reach the size of peas.
- Wash the butter grains draining out the butter- milk as done in the case ofbutter making with hand churn.
- Take a sample of butter- milk for testing its fat content.

iii. Results/Observation

Record your observations in the production chart for creamery butter.

PRECAUTIONS

1. When power wooden churn is used for making butter, preparation of churn

may be done as in the case of hand churn.

2. While scalding the power churn keep the ventilation open

Experiment 10: Experiment on detection of food adulteration

Introduction:

Adulteration in food is normally present in its most crude form; prohibited substances are either added partly or wholly substituted.Adulteration of food causes several health problems in humans.

Aim: To conduct experiments on detection of food adulteration

Materials required:

Food samples

Test tubes

lactometer

Dil Hydrochloric acid.

Conc hydrochloric acid

Iodine solution

2% furfural solution

Procedure:

A few simple tests can be done to detect adulterants found in common foodstuffs.

1. **Metanil yellow in pulses**

Shake 5 gms of the suspected pulses with 5 ml of water. Add a few drops of hydrochloric acid. A pink colour shows the presence of metanil yellow.

2. Kesari Dal in Channa or Other Dals

Add 5 ml of dil hydrochloric acid to a small quantity of dal in a glass. Keep the glass immersed in water for 15 minutes. Development of pink colour indicates the presence of Kesari dal.

3. Water in milk:

Measure the specific gravity with a lactometer. The normal values will fall between 1.030 and 1.034.

4. Starches in milk:

Take 5mL of milk sample in a test tube. Add 1-2 drops of iodine solution and shake well. Appearance of blue colour indicates the presence of starch in the sample.

7. Chalk or any other dust or dirt in sugar

Take a small amount of sugar in a test tube and shake well with little water. Pure sugar dissolves in water but insoluble impurities don’t dissolve.

Take a small amount of sugar in a test tube, add few drops of dil.HCl and observe. Brisk effervescence of CO_2 shows the presence of chalk powder or washing soda in the given sample of sugar.

8. Vanaspati in ghee

Take 5mL of melted ghee sample in a test tube. Add 5mL of conc. HCL to it. Then add 2-3 drops of 2% solution of furfural in alcohol. Shake the mixture well and allow standing for 10 minutes. Appearance of rose red colour indicates the presence of vanaspati in ghee.

Result:

Experiments on detection of food adulteration were studied.

Experiment 11: Experiments on estimation of protein in food.

Aim:

The crude protein samples was determined using Kjelel distillation unit.

Materials required:

- Kjelel distillation unit
- Digestion mixture
- Concentrated H_2SO_4
- NaOH
- 0.01N HCL
- Boric acid solution with mixed indicator

Procedure:

- A finely grounded 0.8g of food sample powder was transferred to a digestion tube
- Add 0.5g of digestion mixture and 12ml of Concentrated H_2SO_4
- The sample was digested in a digestion unit till it became colorless.
- Then the digestion tubes were cooled and transferred to the distillation unit.
- 30ml of 40 % NaOH solution was allowed into the tube.
- Liberated ammonium gas was absorbed in 4% boric acid solution containing mixed indicator.
- The pink color of the boric acid solution was turned into green and this was titrated against 0.01N HCL until the pink color was obtained.
- The crude protein was obtained by using following formula.

Protein (%) = (TV x 0.014 x 100 ml x0.01 x 100 x 6.25)/{(weight of sample (g) x Aliquot used for distillation (ml))}

Where, TV – Titre Value

Result:

Hence the protein of food sample is estimated.

Experiment 12: Experiment on expansion and oil absorption characteristics of snacks on frying

Introduction:

Oil absorbed by food material increases in surface area. Oil absorption depends upon the composition of the food material.

Aim: To determine the expansion and oil absorption characteristics of snacks on frying.

Materials required:

Food sample

Weighing balance

cooking stove

Filter paper

Procedure

1. **Oil absorption**
   - Take a measured quantity of oil
   - Measure 100 gm of food sample and fry in the oil.
   - The amount of oil absorbed by 100 gm of the product was calculated by the difference in weight of oil before and after frying the product.

2. **Oiling off**
   - Weigh a filter paper and place the fried sample
   - After an hour, weigh the filter paper for final weight
   - Difference in the weight of the filter paper gives the values of oiling off.

3. **Surface area**
   - Take a piece of sample and find the surface area before frying.
   - Find the surface area of the sample after frying.
   - Difference in the surface area gives the area expanded.

Result:

Expansion and oil absorption characteristics of snacks on frying were determined.

Observation:

Initial amount of oil –

Final amount of oil after frying

Initial weight of filter paper –

Final weight of filter paper after absoroption-

Initial surface area of sample-

Final surface area of samople after frying-

1. **Oil absorption – {(initial – final)/ initial} *100**
2. **Oiling off - difference in filter paper weight**
3. **Surface area - { (final - initial)/final} *100**

VIVA QUESTIONS

1. What are the important properties of parboiled rice?

Parboiled (converted) rice is partially precooked in its husk, which retains some nutrients otherwise lost during refining. It may benefit gut health and impact blood sugar less than brown or white rice. Still, though parboiled rice is healthier than regular white rice, brown rice remains the most nutritious option.

2. What Is Meant By Blanching And Refreshing?

After covering the food with cold water, brought to boil, or as in the case of vegetables plunged into boiling liquid and rinsed under cold water to remove sediment and impurities, bitterness, and to stop discolouration will be called as blanching and refreshing.

3. Define Boiling?

Boiling is the cooking of foods in a liquid either at or brought to boiling point. Although boiling appears to be a simple method of cookery care must be taken to prepare, time and finish the items.

4. What Is The Basic Different Between Saturated Fatty Acids & Unsaturated Fatty Acids?

Saturated fatty acids in which the hydrocarbon chain is saturated with hydrogen. Unsaturated fatty acids in which the hydrocarbon chain is not saturated with hydrogen and therefore has one or more double bonds.

5. Effect of Heat: as Fats Are Heated At melting point, Which Noticeable Changes Take Place?

Fats melt when heated. Since fats are mixtures of triglycerides they do not have a distinct melting-point but melt over a range of temperature. The temperature at which melting starts is called the slip point. Most fats melt at a temperature between 30°C and 40°C. The melting-point for oils is below normal air temperature. The more double bonds the lower the melting point.

6. As Fats Are Heated At smoke point, Which Noticeable Changes Take Place?

Smoke-point is a useful measure when assessing the suitability of a fat or oil for frying purposes. Repeated heating of a fat or oil or the presence of burnt food particles will reduce the smoke-point. Repeated beating will also produce oxidative and hydrolytic changes in the fat and result in the accumulation of substances giving undesirable flavours to the foods cooked in the fat.

7. How Butter Is Made?

Butter is made by churning pasteurized cream. During churning the cream becomes more viscous and finally a mass of solid butter is produced. The liquid by-product, known as buttermilk, is removed and the butter is mixed to give the desired consistency. Salt and colouring matter may be added at this stage, although some butter is sold unsalted. The churning or agitation process reverses the emulsion. Cream is an emulsion of fat globules dispersed in a water phase. During churning the fat globules aggregate and form a solid phase which is interspersed by small water droplets. Butter is therefore a water-in-fat emulsion.

8. What Is Cheese?

Cheese is the curd of or the fresh or matured product obtained by enzyme activity and subsequent separation of whey by drainage, after coagulation of milk, cream, partly skimmed milk, butter milk or a combination of these bases.

9. How to determine microbial load in food?

An easier and more accurate method to determine the microbial count is the plate method, where a food sample is placed on a culture medium plate. After an appropriate incubation period, you can count the number of colonies that have formed on the culture medium plate.

10. What is the process of rehydration?

Rehydration involves three simultaneous processes: imbibition of water into the dried material, swelling, and leaching of soluble materials. The rate and extent of rehydration depend on the extent of disruption to the cellular structure and chemical changes caused by dehydration.

11. What are the factors affecting osmotic dehydration?

Factors such as the fruit: solution ratio, temperature, solution concentration, agitation level and processing time and temperature can influence the mass transfer of water and solutes in the osmotic dehydration process. Temperature is one of the most important parameters in the osmotic dehydration kinetics.

12. What is the principle of dehydration?

Dehydration is a process of simultaneous heat and moisture transfer. The heat is required to evaporate the moisture, which is removed from the product surface by the external dehydration medium, usually air.

13. What food can be extruded?

Extrusion processing has become an important food process in the manufacture of pasta, ready-to-eat cereals, snacks, pet foods, and textured vegetable protein (TVP). An extruder consists of tightly fitting screw rotating within a stationary barrel.

14. Are extruded foods bad for you?

Price Foundation claims that the cereal industry has convinced the United States Food and Drug Administration that extruded grains have no effect on human health or animal health. But new studies show that these extruded grains DO indeed effect our health, and are extremely toxic.

15. What are the 5 physical properties of milk?

Physical and chemical properties of milk; Density, on-fat Dry Matter, pH, Acidity, Freezing point, Boiling point.

16. What is cream separation principle?

Separation of cream is based on the principle that milk fat, because of its lower density is lighter than the skim milk portion. Hence it tends to rise to the surface and separates from the serum (skim milk). This principle is applicable to both gravity method and mechanical method of cream separation.

17. What are the parts of cream separator?

The main parts of a cream separator are: Supply can/milk basin, milk faucet, regulating chamber with float, cream screw and skim milk screw, cream spout and skim milk spout, Separator bowl (consisting of bowl shell, milk distributor, discs and rubber ring), spindle, gears, crank handle and bowl nut.

18. How long does it take to make butter in a butter churn?

Churning time is dependent on the starting temperature of the cream and the speed of churning. If start with cream at 65 °F and churn at a speed of about 120-150 RPM, the total time of making butter (including draining buttermilk and molding butter) is about 20-25 minutes.

19. How is butter churned?

Butter was first made by placing the cream in a container made from animal material and shaking until the milk has broken down into butter. Later wood, glass, ceramic or metal containers were used. The first butter churns used a wooden container and a plunger to agitate the cream until butter formed.

20. What is food adulteration give an example?

Intentional Adulteration: - When substances that look similar to the constituents of the food are added to it, to increase its weight and gain more profit. Example- mixing of pebbles, stones, marbles, sand, mud, filth, chalk powder, contaminated water, etc.

21. What are two harmful effects of food adulteration?

Leads to various diseases: Due to the consumption of adulterated food, we can get various chronic diseases like Liver Disorder, Diarrhoea, Stomach Disorder, Lahyrism Cancer, Vomiting, Dysentery, Cancer, Joint Pain, Heart Diseases, and Food Poisoning etc.

22. Why do we do protein estimation?

Protein quantification is necessary to understand the total protein content in a sample or in a formulated product. Accurate protein quantification is important as a range of other critical assays require precise total protein content results in order to generate data.

23. How is total protein calculated?

The traditional method for measuring total protein uses the biuret reagent, but other chemical methods such as Kjeldahl method, dye-binding and refractometry are now available. The measurement is usually performed on automated analysers along with other laboratory tests.

24. How do fried foods reduce oil absorption?

When battering foods before frying, be sure to use carbonated liquids, a small amount of leavening (baking soda), or both in the batter. These release gas bubbles as the food cooks, further reducing oil absorption.

25. What happens to oil when fried?

First of all, fried food contains a lot of trans-fat. Trans-fat forms when the food undergoes the process called hydrogenation meaning unsaturated fats turn into trans-fats. Reusing oil also causes the food to have more trans-fat than when fresh oil is used.