SRM Valliammai Engineering College

(An Autonomous Institution)

DEPARTMENT OF MECHANICAL ENGINEERING

ENGINEERING PRACTICES LAB

(GE3134)

LABORATORY MANUAL

ACADEMIC YEAR 2025-2026

Prepared by

Mr.G.Lokesh

Assistant Professor/ Mechanical

EPL – MECHANICAL

MECHANICAL ENGINEERING PRACTICE

Welding:

(a) Preparation of butt joints, lap joints and T- joints by Shielded metal arc welding.

(b) Gas welding practice - study

Basic Machining:

(a) Facing, Turning and Chamfering

(b) Step turning

Sheet Metal Work:

(a) Forming & Bending - study

(b) Model making – Rectangular Tray

Demonstration on:

(a) Smithy operations, upsetting, swaging, setting down and bending.

(b) Foundry operations like mould preparation for gear and step cone pulley.

(c) Assembly of centrifugal pump

(d) Assembly of air conditioner

LIST OF EQUIPMENT FOR A BATCH OF 30 STUDENTS:

1. Arc welding transformer with cables and holders	5 Nos.
2. Welding booth with exhaust facility	5 Nos.
3. Welding accessories like welding shield, chipping hammer, wire brush, etc.	5 Sets.
4. Oxygen and acetylene gas cylinders, blow pipe and other welding outfit.	2 Nos.
5. Centre lathe	2 Nos.
6. Hearth furnace, anvil and smithy tools	2 Sets.
7. Moulding table, foundry tools	2 Sets.
8. Power Tool: Angle Grinder	2 Nos
9. Study-purpose items: centrifugal pump, air-conditioner	One each.
10. Fitting tools, Hack saw frame, 12' file, hack saw blade	15 no.s

LIST OF EXPERIMENTS

CONTENT	Page No.
WELDING	5
1. Butt Joint	18
2. Lap Joint	21
3. T-Joint	24
LATHE	26
1. Step Turning	35
SHEET METAL	36
1. Rectangular Tray Making	44
DEMONSTRATION ASSEMBLY	46
1. Centrifugal Pump	46
2. Air Conditioner	48
TOPIC BEYOND SYLLABUS	50

WELDING

WELDING

Welding is a fabrication process that joins materials, usually metals or thermoplastics, by causing coalescence. This is often done by melting the work pieces and adding a filler material to form a pool of molten material (the weld puddle) that cools to become a strong joint, with pressure sometimes used in conjunction with heat, or by itself, to produce the weld. This is in contrast with soldering and brazing, which involve melting a lower-melting-point material between the work pieces to form a bond between them, without melting the work pieces.

Many different energy sources can be used for welding, including a gas flame, an electric arc, a laser, an electron beam, friction, and ultrasound. While often an industrial process, welding can be done in many different environments, including open air, underwater and in space. Regardless of location, however, welding remains dangerous, and precautions must be taken to avoid burns, electric shock, eye damage, poisonous fumes, and overexposure to ultraviolet light.

TYPES OF WELDING

Arc Welding

Arc welding is a process utilizing the concentrated heat of an electric arc to join metal by fusion of the parent metal and the addition of metal to joint usually provided by a consumable electrode. Either direct or alternating current may be used for the arc, depending upon the material to be welded and the electrode used.

Gas Welding

It is a metal joining process in which the ends of pieces to be joined are heated at their interface by producing coalescence with one or more gas flames (such as oxygen and acetylene), with or without the use of a filler metal.

Welding Safety

Welding hazards pose an unusual combination of safety and health risks. By its nature, welding produces fumes and noise, gives off radiation, involves electricity or gases, and has the potential for burns, shock, fire, and explosions.

Some hazards are common to both electric arc and oxygen-fuel gas welding. If you work with or near a welding operation, the following general precautions should help you to work more safely.

- Weld only in designated areas.
- Only operate welding equipment you have been trained to use.
- Know what the substance is that's being welded and any coating on it.
- Wear protective clothing to cover all exposed areas of the body for protection sparks, hot spatter, and radiation.
- Protective clothing should be dry and free of holes, grease, oil, and other substances which may burn.
- Wear flameproof gauntlet gloves, a leather or asbestos apron, and high-top shoes to provide good protection against sparks and spatter.
- Wear specifically designed, leak-proof helmets equipped with filter plates to protect against ultraviolet, infrared, and visible radiation.
- Never look at a flash, even for an instant.

- Keep your head away from the plume by staying back and to the side of the work.
- Use your helmet and head position to minimize fume inhalation in your breathing zone.
- Make sure there is good local exhaust ventilation to keep the air in your breathing zone clear.
- Don't weld in a confined space without adequate ventilation and a NIOSH-approved respirator.
- Don't weld in wet areas, wear wet or damp clothing or weld with wet hands.
- Don't weld on containers which have held combustible materials or on drums, barrels or tanks until proper safety precautions have been taken to prevent explosions.
- If others are working in the area be sure they are warned and protected against arcs, fumes, sparks, and other welding hazards.
- Don't coil the electrode cable around your body.
- Ground both the frame of the welding equipment and metal being welded.
- Check for leaks in gas hoses using an inert gas.
- Check area around you before welding to be sure no flammable material or degreasing solvents are in the welding area.
- Keep a fire watch in the area during and after welding to be sure there are no smoldering materials, hot slag or live sparks which could start a fire.
- Locate the nearest fire extinguisher before welding.
- Deposit all scraps and electrode butts in proper waste container to avoid fire and toxic fumes.

Types of arc welding

Different types of arc welding are.

1. Carbon arc welding
2. Metal arc welding
3. Metal inert gas welding
4. Submerged arc welding
5. Plasma arc welding etc.

Electric Arc Welding,

Electric arc welding is the most widely used of the various arc welding processes. Welding is performed with the heat of an electric arc that is maintained between the end of a coated metal electrode and the work piece (See Figure 1). The heat produced by the arc melts the base metal, the electrode core rod, and the coating. As the molten metal droplets are transferred across the arc and into the molten weld puddle, they are shielded from the atmosphere by the gases produced from the decomposition of the flux coating. The molten slag floats to the top of the weld puddle where it protects the weld metal from the atmosphere during solidification. Other functions of the coating are to provide arc stability and control bead shape. More information on coating functions will be covered in subsequent lessons.

Welding Power Sources: Shielded metal arc welding may utilize either alternating current (AC) or direct current (DC), but in either case, the power source selected must be of the constant current type. This type of power source will deliver relatively constant amperage or welding current regardless of arc length variations by the operator the amperage determines the amount of heat at the arc and since it will remain relatively constant, the weld beads produced will be uniform in size and shape.

Whether to use an AC, DC, or AC/DC power source depends on the type of welding to be done and the electrodes used. The following factors should be considered: 1**. Electrode Selection -** Using a DC power source allows the use of a greater range of electrode types. While most of the electrodes are designed to be used on AC or DC, some will work properly only on DC.

2. Metal Thickness - DC power sources may be used for welding both heavy sections and light gauge work. Sheet metal is more easily welded with DC because it is easier to strike and maintain the DC arc at low currents.

3. Distance from Work - If the distance from the work to the power source is great, AC is the best choice since the voltage drop through the cables is lower than with DC. Even though welding cables are made of copper or aluminum (both good conductors), the resistance in the cables becomes greater as the cable length increases. In other words, a voltage reading taken between the electrode and the work will be somewhat lower than a reading taken at the output terminals of the power source. This is known as voltage drop.

4. Welding Position - Because DC may be operated at lower welding currents, it is more suitable for overhead and vertical welding than AC. AC can successfully be used for out-of-position work if proper electrodes are selected.

5. Arc Blow - When welding with DC, magnetic fields are set up throughout the weldment. In weldments that have varying thickness and protrusions, this magnetic field can affect the arc by making it stray or fluctuate in direction. This condition is especially troublesome when welding in corners. AC seldom causes this problem because of the rapidly reversing magnetic field produced.

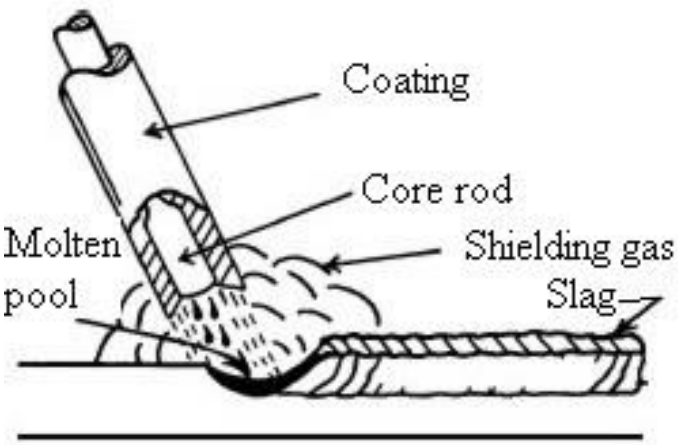

Oxy-Acetylene gas Welding

Oxyacetylene welding, commonly referred to as gas welding, is a process which relies on combustion of oxygen and acetylene. When mixed together in correct proportions within a hand-held torch or blowpipe, a relatively hot flame is produced with a temperature of about 3,200˚C. The chemical action of the oxyacetylene flame can be adjusted by changing the ratio of the volume of oxygen to acetylene.

Three distinct flame settings are used, neutral, oxidising and carburizing. Welding is generally carried out using the neutral flame setting which has equal quantities of oxygen and acetylene. The oxidising flame is obtained by increasing just the oxygen flow rate while the carburising flame is achieved by increasing acetylene flow in relation to oxygen flow. Because steel melts at a temperature above 1,500˚C, the mixture of oxygen and acetylene is used as it is the only gas combination with enough heat to weld steel. However,

other gases such as propane, hydrogen and coal gas can be used for joining lower melting point non-ferrous metals, and for brazing and silver soldering.

Equipment

Oxyacetylene equipment is portable and easy to use. It comprises oxygen and acetylene gases stored under pressure in steel cylinders. The cylinders are fitted with regulators and flexible hoses which lead to the blowpipe. Specially designed safety devices such as flame traps are fitted between the hoses and the cylinder regulators. The flame trap prevents flames generated by a 'flashback' from reaching the cylinders; principal causes of flashbacks are the failure to purge the hoses and overheating of the blowpipe nozzle.

When welding, the operator must wear protective clothing and tinted coloured goggles. As the flame is less intense than an arc and very little UV is emitted, general-purpose tinted goggles provide sufficient protection

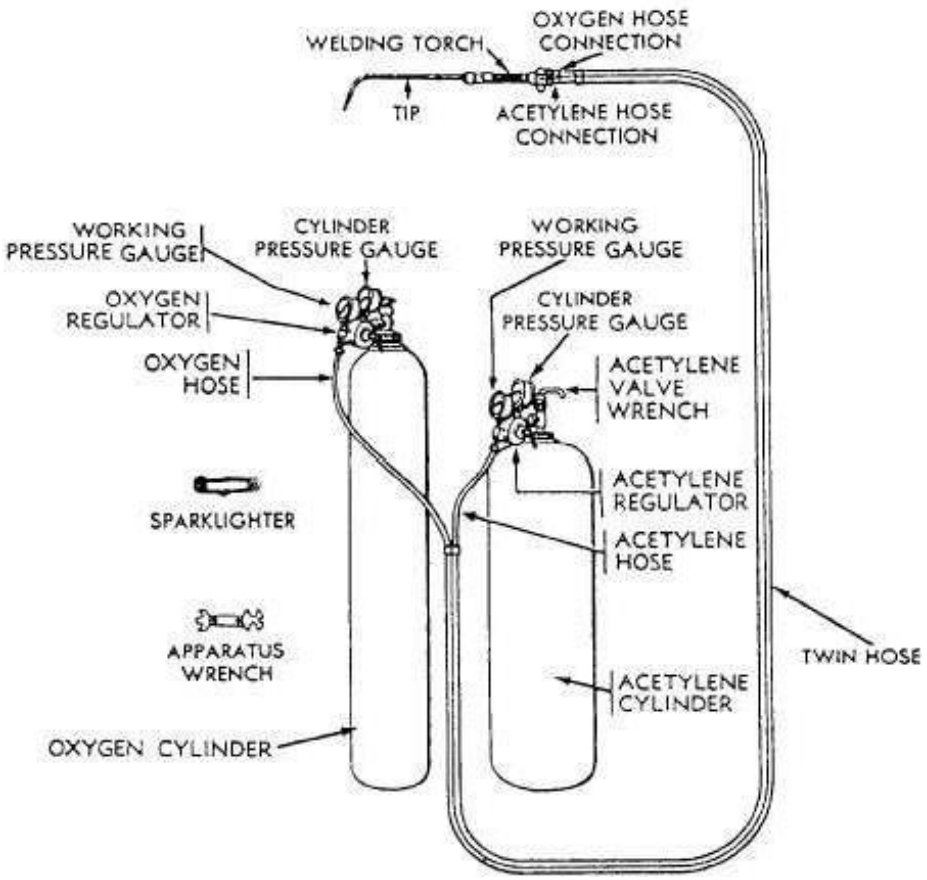

Neutral Flame

As the supply of oxygen to the blowpipe is further increased; the flame contracts and the white

cone become clearly defined, assuming a definite rounded shape. At this stage approximately equal quantities of acetylene and oxygen are being used and the combustion is complete, all the carbon supplied by the acetylene is being consumed and the maximum heat given out. The flame is now neutral, and this type of flame is the one most extensively used by the welder, who should make himself thoroughly familiar with its appearance and characteristics.

Carburising Flame

This is a flame in which an excess of acetylene is burning, i.e. combustion is incomplete and unconsumed carbon is present. When lighting the blowpipe the acetylene is turned on first and ignited, giving a very smoky yellow flame of abnormal size, showing two cones of flame in addition to an outer envelope; this is an exaggerated form of the carburising flame, but gives out comparatively little heat and is of little use for welding.

Oxidising Flame

A further increase in the oxygen supply will produce an oxidising flame in which there is more oxygen than is required for complete combustion. The inner cone will become shorter and sharper, the flame will turn a deeper purple colour and emit a characteristic slight "hiss", while the molten metal will be less fluid and tranquil during welding and excessive sparking will occur. An oxidising flame is only used for special applications, and should never be used for welding

Welding Tools and Safety Equipments

Goggles

Goggles are forms of protective eyewear that usually enclose or protect the eye area in order to prevent particulates, infectious fluids, or chemicals from striking.

Face Shield

Face shield is used to protect the eyes of the welder from the little sparks produced during welding. It is normally held in hand.

Hand Gloves

Hand gloves are used to protect the hands from electrical shock, arc radiation and hot spatters.

Tongs

Tongs are used to handle the hot metal – welding job while cleaning. They are also used to hold the metal for hammering.

Chipping Hammer

Chipping hammer is a chisel shaped tool and is used to remove the slag from the weld bead.

Wire brush

A wire brush is made up of stiff steel wire embedded in a wooden piece. It removes small particles of slag from the weld bead after the chipping hammer has done its job.

Welding Helmet

Welding helmets are headgear used when performing certain types of welding to protect the eyes , face and neck from flash burn, ultraviolet light, sparks and heat. Welding helmets can also prevent retina burns, which can lead to a loss of vision.

Ground Clamp

It is connected to the end of the ground cable. It is normally clamped to the welding table or the job itself to complete the electric circuit.

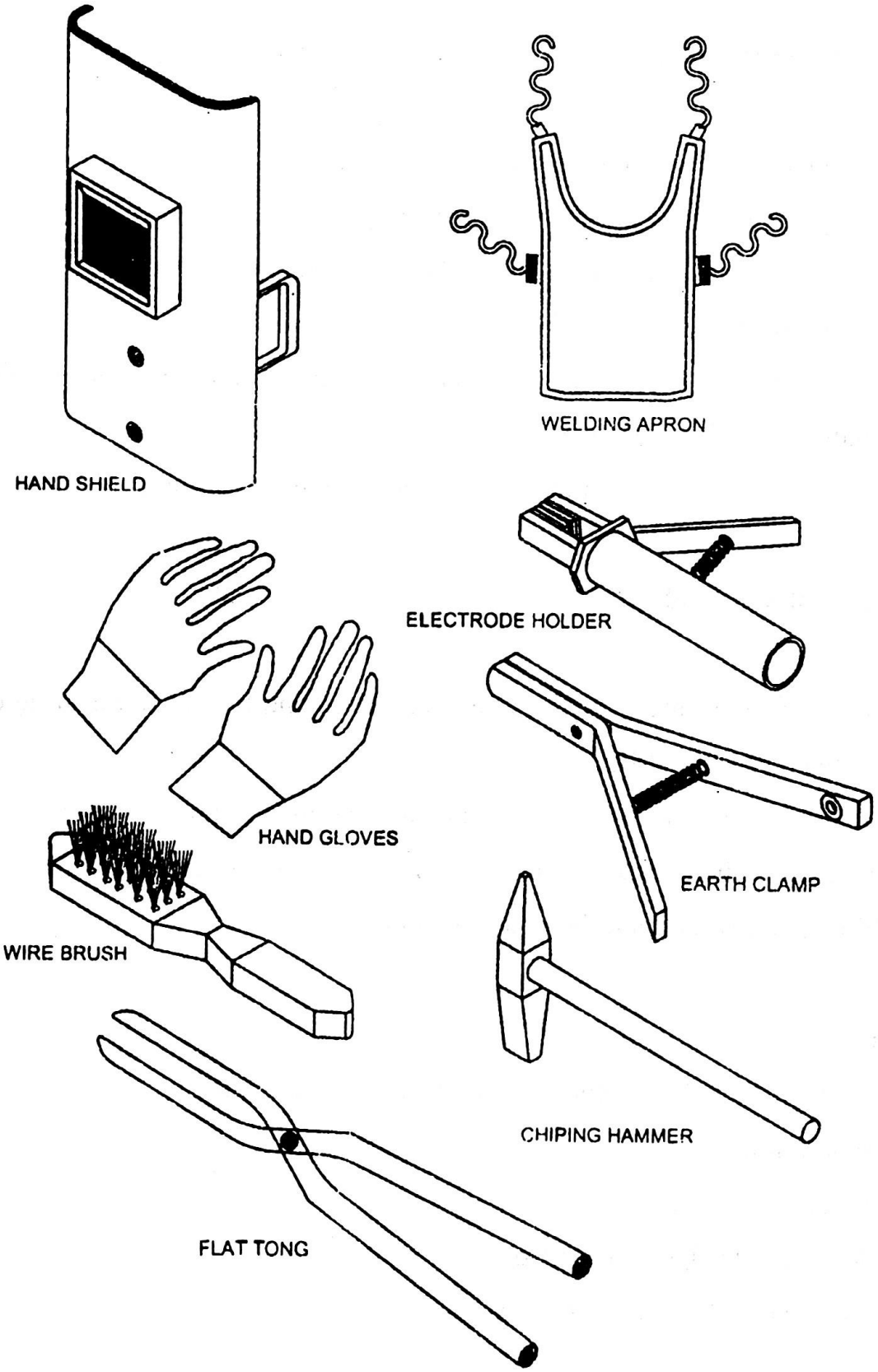
HAND SHIELD
WELDING APRON
ELECTRODE HOLDER
HAND GLOVES
EARTH CLAMP
WIRE BRUSH
CHIPING HAMMER
FLAT TONG

Advantages of Arc Welding

1. A big range of metals and their alloys can be welded
2. Welding equipment is portable and the cost is fairly low
3. Flux shielded manual metal arc welding is the simplest of all the arc welding processes.
4. The applications of the arc welding are innumerable, because of the availability of wide variety of electrodes.
5. Welding can be carried out in any position with highest weld quality.

Disadvantages of arc welding

1. Because of the limited length of each electrode and brittle flux coating on it, mechanization is difficult.
2. In welding long joints, as one electrode finishes, the weld is to be progressed with the next electrode. A defect may occur at the place where welding is restarted with the new electrode.

Applications

1. In reservoir tank, boiler and pressure vessel fabrications
2. Ship building
3. Pipes and pen stock joining
4. Building and bridge construction
5. Automotive and air craft industry

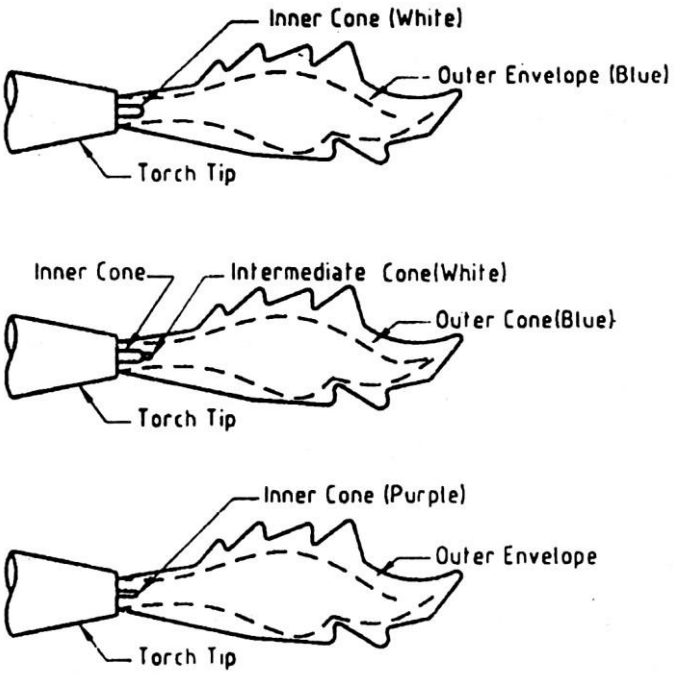

TYPES OF OXY-ACETYLENE FLAME

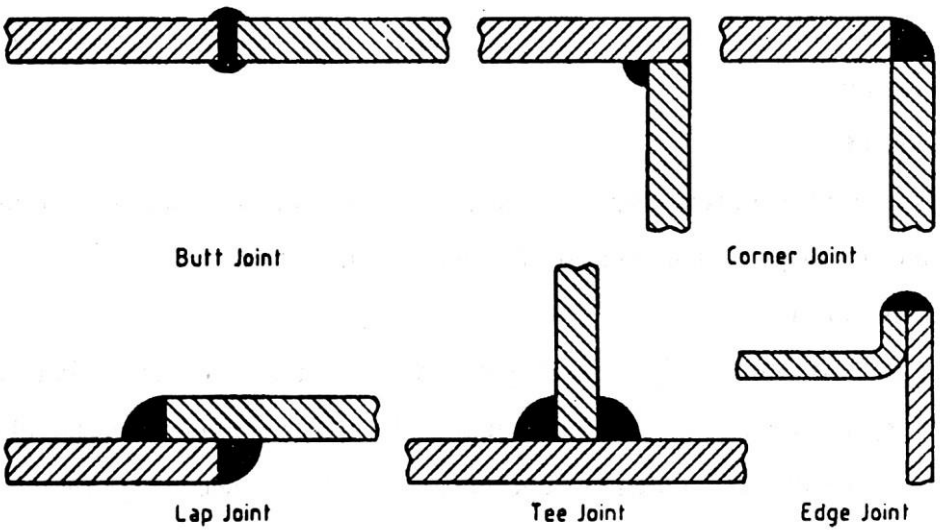

BASIC TYPES OF WELDED JOINTS

Types of Joints

The joints used in welding are

1. Butt joint 2. Lap joint 3. Edge joint

4. T – joint 5. Corner joint

1. Butt joint

It is used to join the ends or edges of plates lying in the same plane. Plates having thickness less than 5mm do not require edge preparation but plates having thickness more than 5mm require edge preparation on both sides.

2. Lap joint

It is used to join two over lapping pieces so that the edges of each piece are welded to the surface of the other. It is used on plates less than 3mm thickness. Common types are single lap and double lap joint. Edge preparation is not required for these joints.

3. Edge joint

It is used to weld two parallel plates. This is economical for joining thin plates up to 6mm. This joint is often used in sheet metal work. It is suitable for severe loading.

4. T – joint

It is used to weld two perpendicular plates. This is economical for joining thin plates up to 3mm. This joint is often used in structures.

5. Corner joint

It is used to join the edges of two pieces whose surfaces are approximately at right angles to each other. It is common in the construction of boxes, tanks, frames and other similar items. Edge preparation is not necessary for these joints.

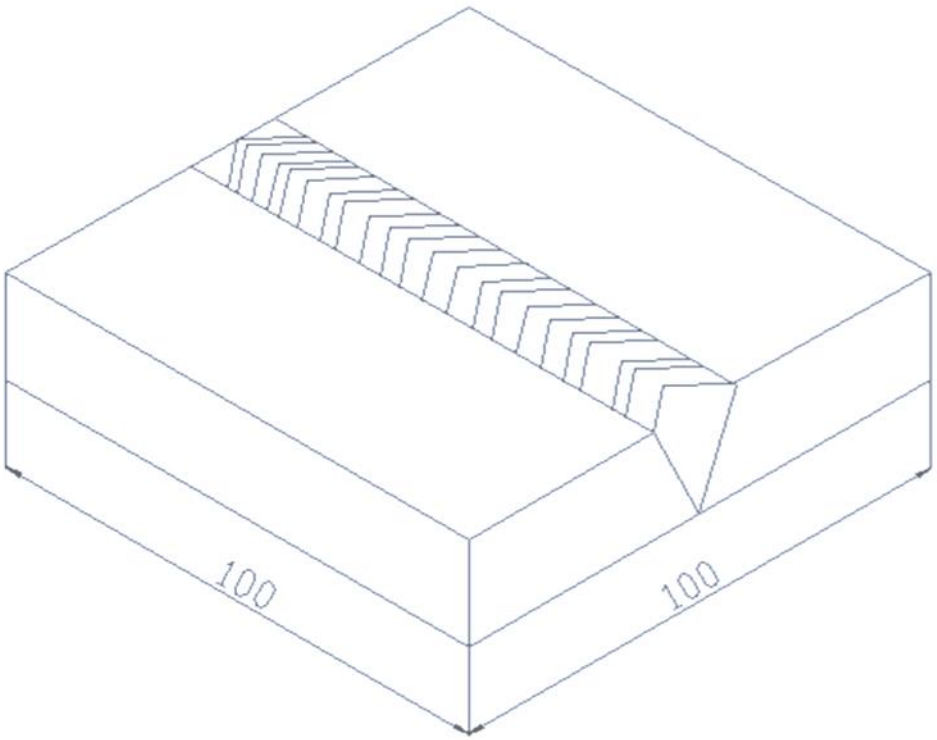
100
100

1. BUTT JOINT

Aim:

To make a butt joint on the given work pieces using arc welding.

Apparatus required:

Work pieces, Welding electrodes, Welding machine, Tongs, Wire brush, chipping hammer, Gloves and Goggles.

Procedure:

1. The given work pieces are cleaned with the wire brush to remove the rust, scale and other impurities.
2. Edges are prepared suitably to the given dimension and positioned for the butt joint.
3. Depending upon the thickness of the parent metal, the amperage and correct voltage is selected.
4. With goggles covering the eyes and gloves on hands, an arc is struck on the work piece and tacks are made at the extreme ends.
5. Welding process is progressed along the seam at a constant speed and keeping uniform distance between the electrode and the work piece.
6. Using chipping hammer the flux in the form of slag is chipped off and then cleaned.
7. After welding, the work pieces should be handles only using the tongs.

Result:

Thus the required butt joint is obtained as per the given dimensions.

VIVA QUESTIONS AND ANSWERS

1. Name the types of welding.

(i) Arc welding (ii) Argon welding (Iii) Gas welding (iv) Tig welding (v) Mig welding (vi) Spot welding

2. Which is are the types of joint?

Butt joint, T - joint, Lap joint.

3. What is welding?

Joining of two similar metals

4. Name the welding tools used in workshop.

Welding holder, welding rod, hand shield, hand gloves, chipping hammer, wire brush

5. Which outer cover is on the welding rod?

Silicon

6. What is the use of welding holder?

It hold the electrode firmly.

7. What is the use of hand shield?

It protects the face from sparks.

8. What is the use of hand gloves?

It protects the hands from sparks.

9. What is the use of chipping hammer?

It is used to remove the waste material from welded metal.

10. What is the use of wire brush?

It is used to clean the outer surface of welded metal.

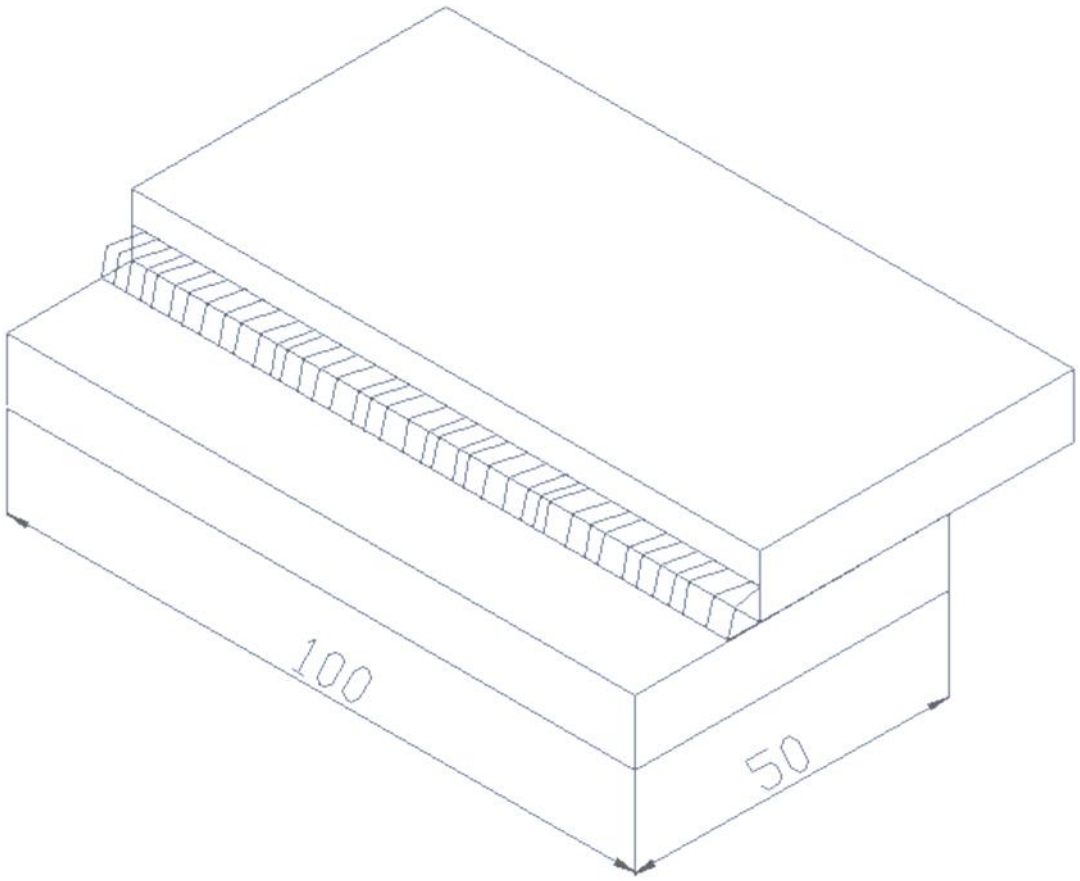
100
50

2. LAP JOINT

Aim:

To make a lap joint on the given work pieces using arc welding.

Apparatus required:

Work pieces, Welding electrodes, Welding machine, Tongs, Wire brush, chipping hammer, Gloves and Goggles.

Procedure:

1. The given work pieces are cleaned with the wire brush to remove the rust, scale and other impurities.
2. Edges are prepared suitably to the given dimension and positioned one over another for the lap joint.
3. Depending upon the thickness of the parent metal, the amperage and correct voltage is selected.
4. With goggles covering the eyes and gloves on hands, an arc is struck on the work piece and tacks are made at the extreme ends.
5. Welding process is progressed along the seam at a constant speed and keeping uniform distance between the electrode and the work piece.
6. Using chipping hammer the flux in the form of slag is chipped off and then cleaned.
7. After welding, the work pieces should be handles only using the tongs.

Result:

Thus the required lap joint is obtained as per the given dimensions.

VIVA QUESTIONS AND ANSWERS

1. Which welding process uses non-consumable electrodes?

   TIG welding

2. What is gas welding?

   Mixture of gases is used to produce high temperature flame.

3. What is filler material?

   It is the material added to the weld pool to assist in filling the gap.

4. What is flux?

   Flux avoids oxidation in welding flame by giving a cover.

5. What are the advantages of using LPG over acetylene for cutting?

   LPG fuel produces rich flame for cutting process.

6. Which equipment is used to supply power for welding?

   Welding transformer

7. What is over head welding?

   Welding done at the top of welding booth is called overhead welding.

8. What are the applications of welding?

   Fabrication of steel windows and rods.

9. What is flux change in welding?

   Flux change is done to switch from one type of welding to other.

10. What are the advantages of using electric arc welding?

    EAW can be done without the use of oxygen cylinder.

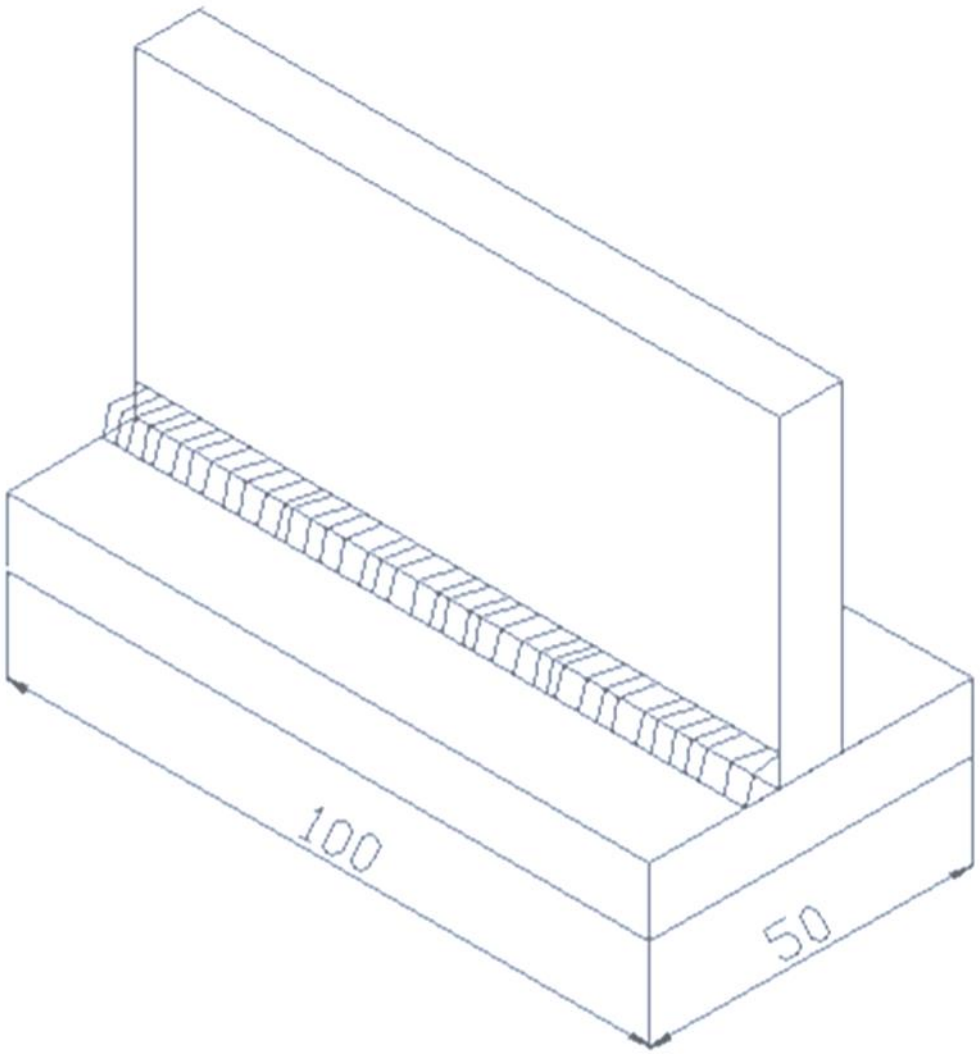
100
50

3. T - JOINT

Aim:

To make a T - joint on the given work pieces using arc welding.

Apparatus required:

Work pieces, Welding electrodes, Welding machine, Tongs, Wire brush, chipping hammer, Gloves and Goggles.

Procedure:

1. The given work pieces are cleaned with the wire brush to remove the rust, scale and other impurities.
2. Edges are prepared suitably to the given dimension and positioned at right angles for the tee joint.
3. Depending upon the thickness of the parent metal, the amperage and correct voltage is selected.
4. With goggles covering the eyes and gloves on hands, an arc is struck on the work piece and tacks are made at the extreme ends.
5. Welding process is progressed along the seam at a constant speed and keeping uniform distance between the electrode and the work piece.
6. Using chipping hammer the flux in the form of slag is chipped off and then cleaned.
7. After welding, the work pieces should be handles only using the tongs.

Result:

Thus the required T - joint is obtained as per the given dimensions.

VIVA QUESTIONS AND ANSWERS

1. What is arc welding?

Electric arc is produced between carbon electrode and work piece to produce heat.

2. What is electrode?

Filler rods used in arc welding are called electrodes.

3. Name the materials used for coating on electrodes.

Copper, Carbon and Graphite.

4. What are the types of resistance welding?

Spot welding, Projection welding and Butt welding.

5. What are the welding defects?

Undercut, Cracking and Incomplete penetration.

6. What is coating done on electrode surface?

Coating is done to avoid melting of electrode.

7. What is butt joint?

Work pieces are welded to either sides.

8. What is lap joint?

Work pieces are welded one over other.

9. What is T- joint?

Work pieces are welded at perpendicular to each other.

LATHE

LATHE

The lathe is used for producing cylindrical work. The work piece is rotated while the cutting tool movement is controlled by the machine. The lathe is primarily used for cylindrical work. The lathe may also be used for: Boring, drilling, tapping, turning, facing, threading, polishing, grooving, knurling etc.

The purpose of a lathe is to rotate a part against a tool whose position it controls. It is useful for fabricating parts and/or features that have a circular cross section. The spindle is the part of the lathe that rotates. Various work holding attachments such as three jaw chucks, collets, and centers can be held in the spindle. The spindle is driven by an electric motor through a system of belt drives and/or gear trains. Spindle speed is controlled by varying the geometry of the drive train.

The tailstock can be used to support the end of the work piece with a center, or to hold tools for drilling, reaming, threading, or cutting tapers. It can be adjusted in position along the ways to accommodate different length work pieces. The ram can be fed along the axis of rotation with the tailstock hand wheel.

The carriage controls and supports the cutting tool. It consists of: A saddle that mates with and slides along the ways, an apron that controls the feed mechanisms, a cross slide that controls transverse motion of the tool (toward or away from the operator), a tool compound that adjusts to permit angular tool movement and a tool post T-slot that holds the tool post.

Feed, Speed, And Depth of Cut

Cutting speed is defined as the speed at which the work moves with respect to the tool. Feed rate is defined as the distance the tool travels during one revolution of the part. Cutting speed and feed determines the surface finish, power requirements, and material removal rate. The primary factor in choosing feed and speed is the material to be cut. However, one should also consider material of the tool, rigidity of the work piece, size and condition of the lathe, and depth of cut. To calculate the proper spindle speed, divide the desired cutting speed by the circumference of the work.

Parts of Lathe

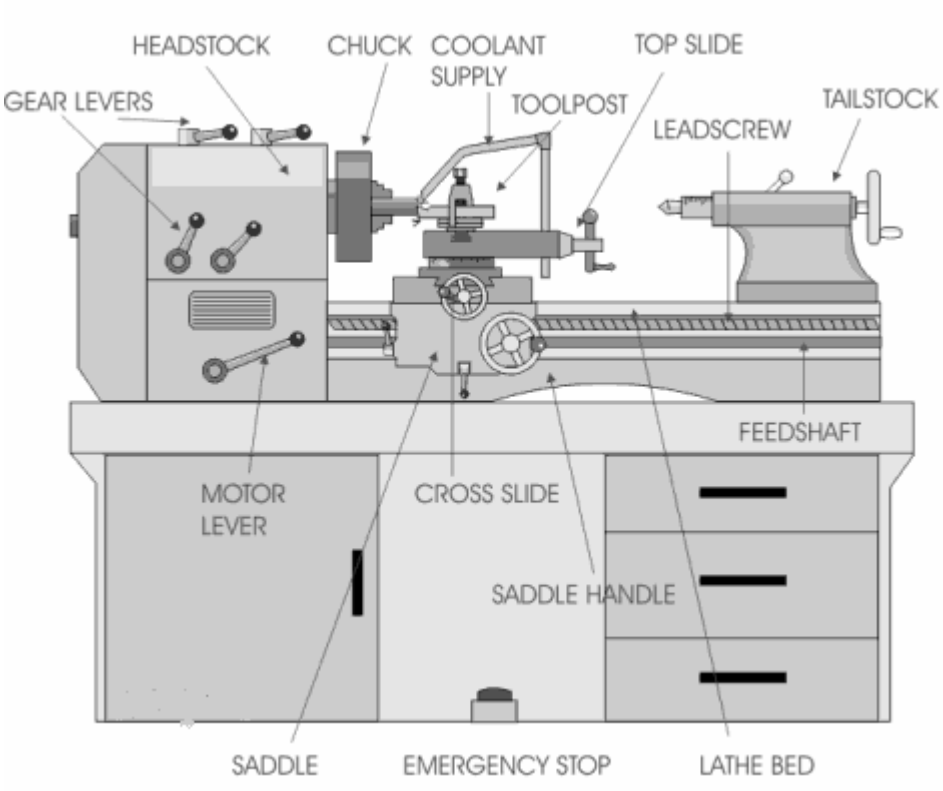

Head Stock

The headstock houses the main spindle , speed change mechanism , and change gears The headstock is required to be made as robust as possible due to the cutting forces involved, which can distort a lightly built housing, and induce harmonic vibrations that will transfer through to the work piece, reducing the quality of the finished work piece

Bed

The bed is a robust base that connects to the headstock and permits the carriage and tailstock to be aligned parallel with the axis of the spindle. This is facilitated by hardened and ground ways which restrain the carriage and tailstock in a set track. The carriage travels by means of a rack and pinion system, leads crew of accurate pitch, or feed screw.

Feed and lead screws

The feed screw is a long driveshaft that allows a series of gears to drive the carriage mechanisms. These gears are located in the apron of the carriage. Both the feed screw and lead screw are driven by either the change gears or an intermediate gearbox known as a quick change gearbox or Norton gearbox. These intermediate gears allow the correct ratio and direction to be set for cutting threads or worm gears. Tumbler gears are provided between the spindle and gear train that enables the gear train of the correct ratio and direction to be introduced. This provides a constant relationship between the number of turns the spindle makes, to the number of turns the lead screw makes. This ratio allows screw threads to be cut on the work piece without the aid of a die.

Carriage

In its simplest form the carriage holds the tool bit and moves it longitudinally (turning) or perpendicularly (facing) under the control of the operator. The operator moves the carriage manually via the hand wheel or automatically by engaging the feed screw with the carriage feed mechanism, this provides some relief for the operator as the movement of the carriage becomes power assisted. The hand wheels on the carriage and its related slides are usually calibrated both for ease of use and to assist in making reproducible cuts.

Cross-slide

The cross-slide stands atop the carriage and has a lead screw that travels perpendicular to the main spindle axis, this permit facing operations to be performed. This lead screw can be engaged with the feed screw (mentioned previously) to provide automated movement to the cross-slide; only one direction can be engaged at a time as an interlock mechanism will shut out the second gear train.

Compound rest

The compound rest is the part of the machine where the tool post is mounted. It provides a smaller amount of movement along its axis via another lead screw. The compound rest axis can be adjusted independently of the carriage or cross-slide. It is utilized when turning tapers, when screw cutting or to obtain finer feeds than the lead screw normally permits.

Tool post

The tool bit is mounted in the tool post which may be of the American lantern style, traditional 4 sided square styles, or in a quick change style. The advantage of a quick change set-up is to allow an unlimited number of tools to be used (up to the number of holders available) rather than being limited to 1 tool with the lantern style, or 3 to 4 tools with the 4 sided type.

Tail Stock

The tailstock is a tool holder directly mounted on the spindle axis, opposite the headstock. The spindle does not rotate but does travel longitudinally under the action of a lead screw and hand wheel. The spindle includes a taper to hold drill bits, centers and other tooling. The tailstock can be positioned along the bed and clamped in position as required. There is also provision to offset the tailstock from the spindles axis; this is useful for turning small tapers.

Lathe Operations

Turning

Turning is the machining operation that produces cylindrical parts. In its basic form, it can be defined as the machining of an external surface:

- with the work piece rotating,
- with a single-point cutting tool, and
- with the cutting tool feeding parallel to the axis of the work piece and at a distance that will remove the outer surface of the work.

Taper turning is practically the same, except that the cutter path is at an angle to the work axis. Similarly, in contour turning, the distance of the cutter from the work axis is varied to produce the desired shape

Facing

Facing is the producing of a flat surface as the result of a tool's being fed across the end of the rotating work piece. Unless the work is held on a mandrel, if both ends of the work are to be faced, it must be turned end for end after the first end is completed and the facing operation repeated. The cutting speed should be determined from the largest diameter of the surface to be faced. Facing may be done either from

the outside inward or from the center outward. In either case, the point of the tool must be set exactly at the height of the center of rotation.

Parting

Parting is the operation by which one section of a work piece is severed from the remainder by means of a cutoff tool. Because cutting tools are quite thin and must have considerable overhang, this process is less accurate and more difficult. The tool should be set exactly at the height of the axis of rotation, be kept sharp, have proper clearance angles, and be fed into the work piece at a proper and uniform feed rate.

Drilling

A lathe can also be used to drill holes accurately concentric with the centerline of a cylindrical part. First, install a drill chuck into the tail stock. Make certain that the tang on the back of the drill chuck seats properly in the tail stock. Withdraw the jaws of the chuck and tap the chuck in place with a soft hammer.

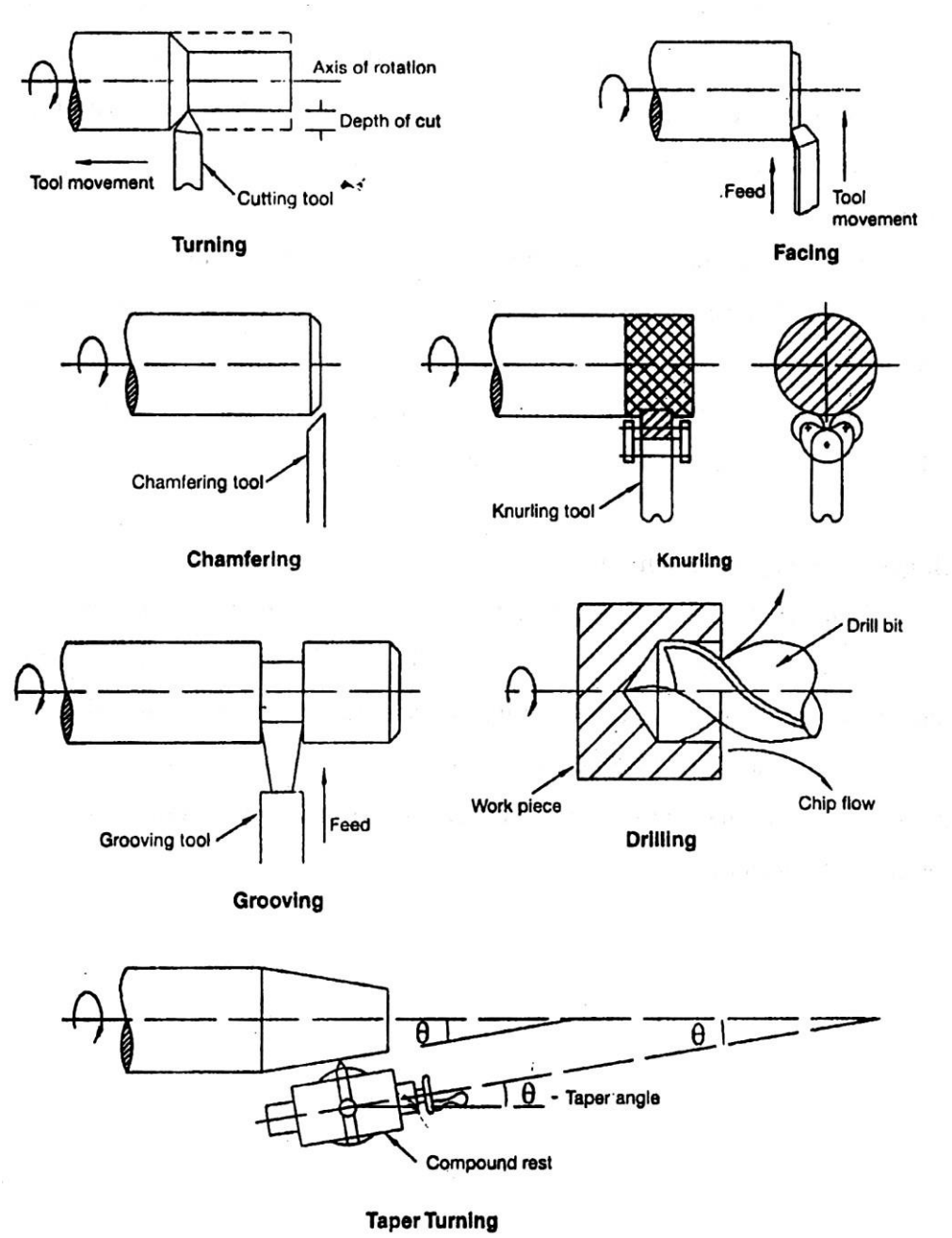

Move the saddle forward to make room for the tailstock. Move the tailstock into position, and lock the bit in place. Before starting the machine, turn the spindle by hand. Just move the saddle forward, so it could interfere with the rotation of the lathe chuck. Always use a center drill to start the hole. .

Boring

Boring is an operation in which a hole is enlarged with a single point cutting tool. A boring bar is used to support the cutting tool as it extends into the hole. Because of the extension of the boring bar, the tool is supported less rigidly and is more likely to chatter. This can be corrected by using slower spindle speeds or by grinding a smaller radius on the nose of the tool.

Single Point Thread Turning

External threads can be cut with a die and internal threads can be cut with a tap. But for some diameters, no die or tap is available. In these cases, threads can be cut on a lathe. A special cutting tool should be used, typically with a 60 degree nose angle. To form threads with a specified number of threads per inch, the spindle is mechanically coupled to the carriage lead screw. Procedures vary for different machines

Given Workpiece

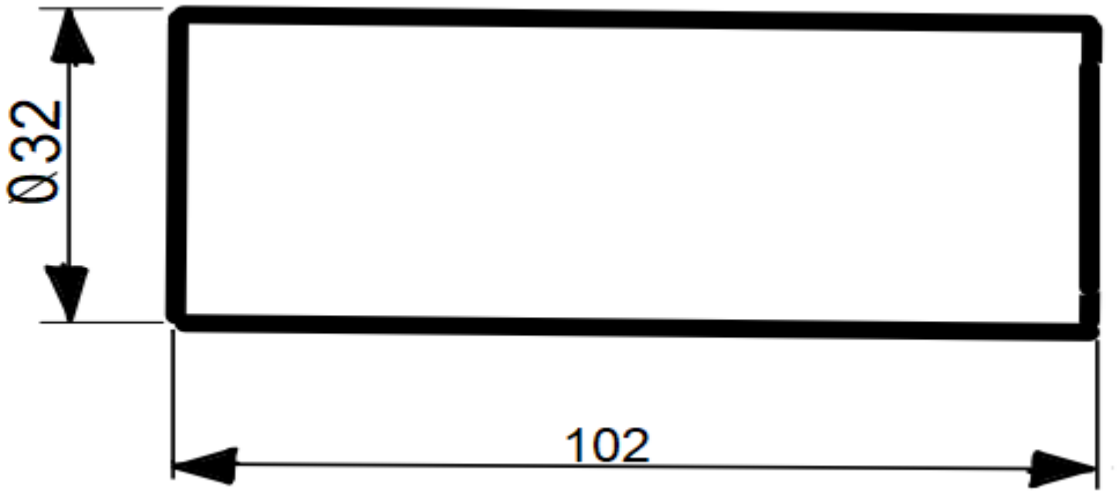

Finished Workpiece

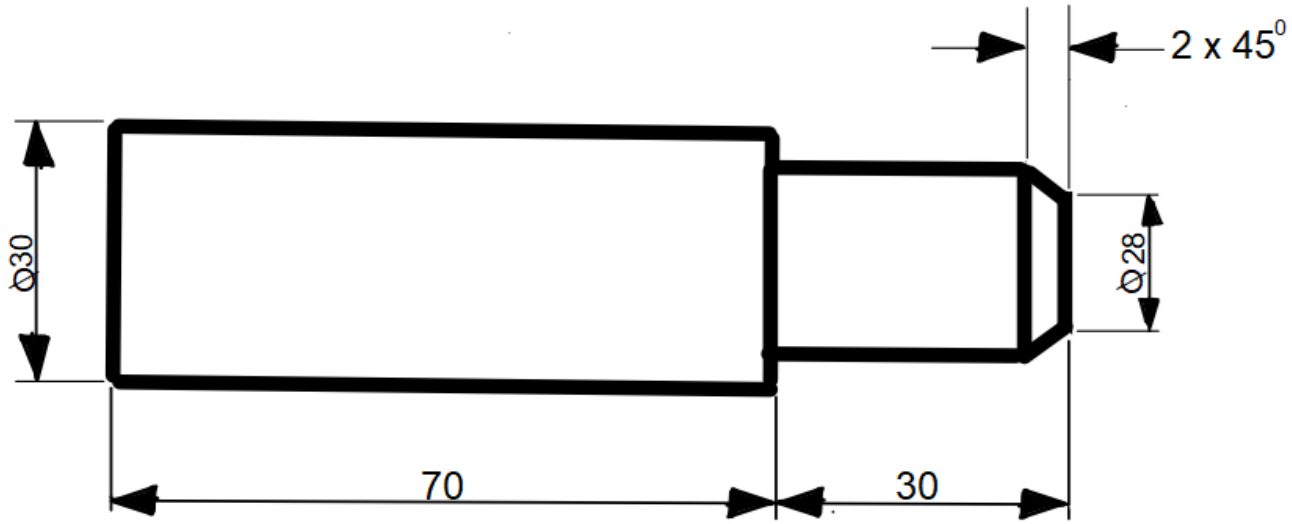

1. STEP TURNING

Aim To perform turning, facing and chamfering on a cylindrical work piece

Tools Required

1. Lathe
2. Three jaw chuck
3. Chuck key
4. Single point cutting tool
5. Vernier caliper

Procedure

1. Loosen the jaws in the chuck using chuck key to position the work piece and then tighten the jaws.
2. Fix the single point cutting tool in the tool post
3. Switch on the lathe, move the carriage near the work piece and give a small cross feed. Move the carriage slowly to the required length
4. Bring the carriage to the original position, give a small cross feed and repeat the steps until the required diameter is obtained. At the end give very small feed to get smooth surface.
5. For facing operation, the cutting tool is tilted by 30˚ and move the carriage to make the tool touch the end surface of the work piece.
6. Give small feed in longitudinal direction and then move the tool inwards using cross slide.
7. For chamfering operation, set the cross slide to 45˚, give small feed in longitudinal direction and then move the tool using cross slide.
8. Check the dimensions regularly using vernier caliper.

Result:

Thus the step turning operations is carried out on the given work piece

SHEET METAL

SHEET METAL

Introduction

Sheet metal is simply metal formed into thin and flat pieces. It is one of the fundamental forms used in metalworking, and can be cut and bent into a variety of different shapes. Countless everyday objects are constructed of the material. Thicknesses can vary significantly, although extremely thin thicknesses are considered foil or leaf, and pieces thicker than 6 mm (0.25 in) are considered plate.

Sheet metal is available as flat pieces or as a coiled strip. The coils are formed by running a continuous sheet of metal through a roll slitter.

The thickness of the sheet metal is called its gauge. The gauge of sheet metal ranges from 30 gauge to about 8 gauge. The higher the gauge, the thinner the metal is.

There are many different metals that can be made into sheet metal, such as aluminum, brass, copper, steel, tin, nickel and titanium. For decorative uses, important sheet metals include silver, gold, and platinum (platinum sheet metal is also utilized as a catalyst.)

Sheet metal has applications in car bodies, airplane wings, medical tables, roofs for building and many other things. Sheet metal of iron and other materials with high magnetic permeability, also known as laminated steel cores, has applications in transformers and electric machines. Historically, an important use of sheet metal was in plate armor worn by cavalry, and sheet metal continues to have many decorative uses, including in horse tack.

Sheet metal processing

The raw material for sheet metal manufacturing processes is the output of the rolling process. Typically, sheets of metal are sold as flat, rectangular sheets of standard size. If the sheets are thin and very long, they may be in the form of rolls. Therefore the first step in any sheet metal process is to cut the correct shape and sized ‘blank’ from larger sheet.

Sheet metal processes

Sheet metal processes can be broken down into two major classifications and one minor classification

- **Shearing processes** - processes which apply shearing forces to cut, fracture, or separate the material.
- **Forming processes** - processes which cause the metal to undergo desired shape changes without failure, excessive thinning, or cracking. This includes bending and stretching.
- **Finishing processes** - processes which are used to improve the final surface characteristics.

Shearing Process

1. Punching: shearing process using a die and punch where the interior portion of the sheared sheet is to be discarded.
2. Blanking: shearing process using a die and punch where the exterior portion of the shearing operation is to be discarded.
3. Perforating: punching a number of holes in a sheet
4. Parting: shearing the sheet into two or more pieces
5. Notching: removing pieces from the edges
6. Lancing: leaving a tab without removing any material

Forming Processes

- **Bending:** forming process causes the sheet metal to undergo the desired shape change by bending without failure. Ref fig.
- **Stretching:** forming process causes the sheet metal to undergo the desired shape change by stretching without failure.
- **Drawing:** forming process causes the sheet metal to undergo the desired shape change by drawing without failure.

- **Roll forming:** Roll forming is a process by which a metal strip is progressively bent as it passes through a series of forming rolls.

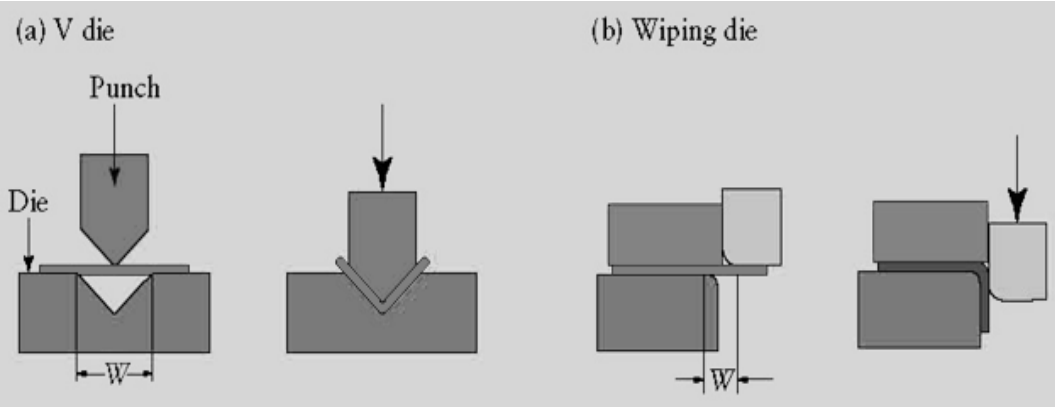

Common Die – Bending operations

Finishing processes

Material properties, geometry of the starting material, and the geometry of the desired final product play important roles in determining the best process

Equipments

Basic sheet forming operations involve a press, punch, or ram and a set of dies

Presses

- **Mechanical Press** - The ram is actuated using a flywheel. Stroke motion is not uniform.
- **Hydraulic Press** - Longer strokes than mechanical presses, and develop full force throughout the stroke. Stroke motion is of uniform speed, especially adapted to deep drawing operations.

Dies and Punches

- **Simple**- single operation with a single stroke
- **Compound**- two operations with a single stroke
- **Combination**- two operations at two stations

- **Progressive**- two or more operations at two or more stations with each press stroke, creates what is called a strip development

Tools and Accessories

The various operations such as cutting, shearing, bending, folding etc. are performed by these tools.

Marking and measuring tools

- **Steel Rule** - It is used to set out dimensions.
- **Try Square** - Try square is used for making and testing angles of 90degree
- **Scriber** – It used to scribe or mark lines on metal work pieces.
- **Divider** - This is used for marking circles, arcs, laying out perpendicular lines, bisecting lines, etc

Cutting Tools

- **Straight snip** - They have straight jaws and used for straight line cutting. Ref fig.
- **Curved snip** - They have curved blades for making circular cuts. Ref fig.

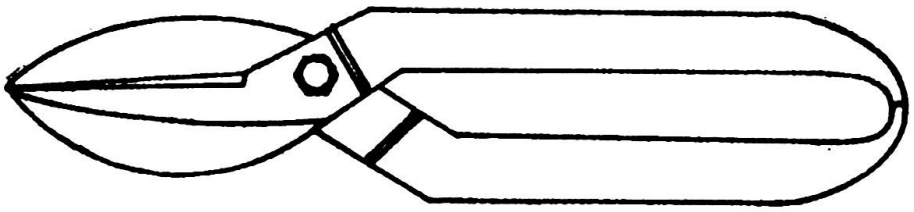

STRAIGHT SNIP

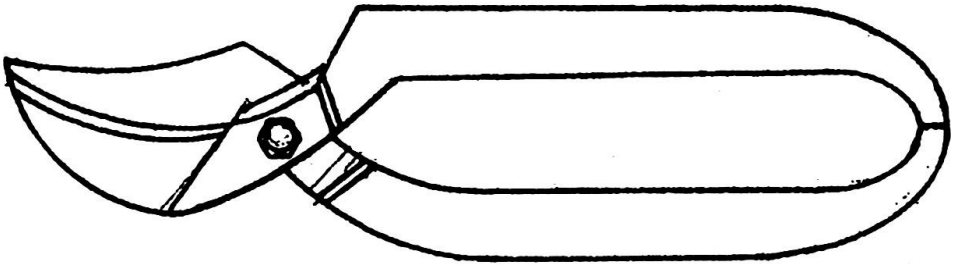

CURVED SNIP

Striking Tools

Mallet - It is wooden-headed hammer of round or rectangular cross section. The striking face is made flat to the work. A mallet is used to give light blows to the Sheet metal in bending and finishing. Ref fig.

Hammers – Hammers are also used in sheet metal work for forming shapes. Commonly used hammers are rubber / nylon hammers and creasing hammer.

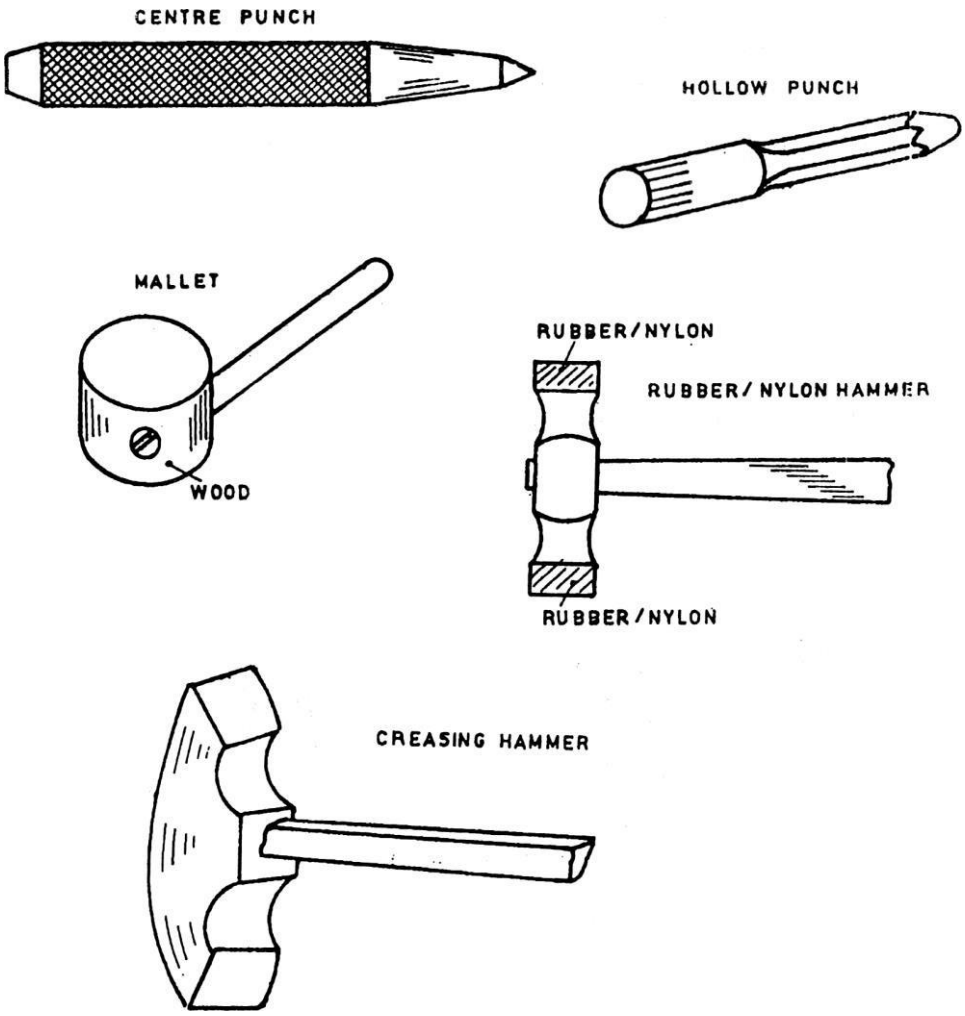

Merits

High strength

Good dimensional accuracy and surface finish

Relatively low cost

Demerits

Wrinkling and tearing are typical limits to drawing operations

Different techniques can be used to overcome these limitations

- Draw beads
- Vertical projections and matching grooves in the die and blank holder

Trimming may be used to reach final dimensions

Applications

Roofings

Ductings

Vehicles body buildings like 3 wheelers, 4 wheelers, ships, aircrafts etc.

Furnitures, House hold articles and Railway equipment

Finished Workpiece

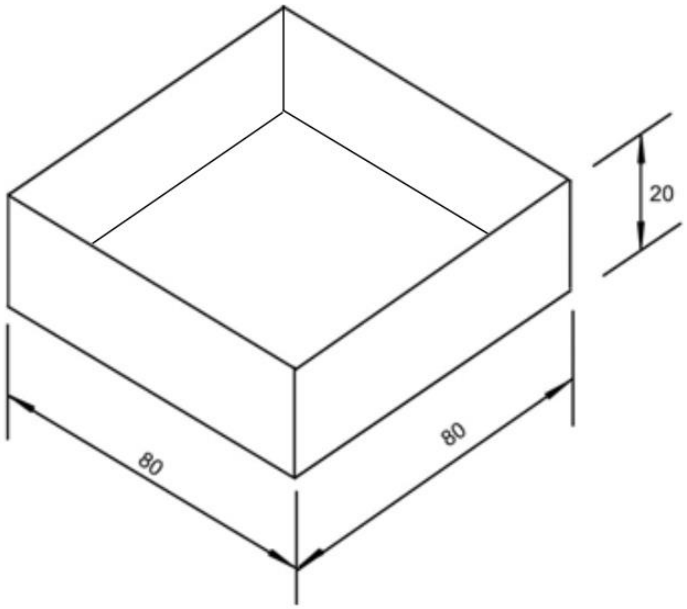

Given Workpiece

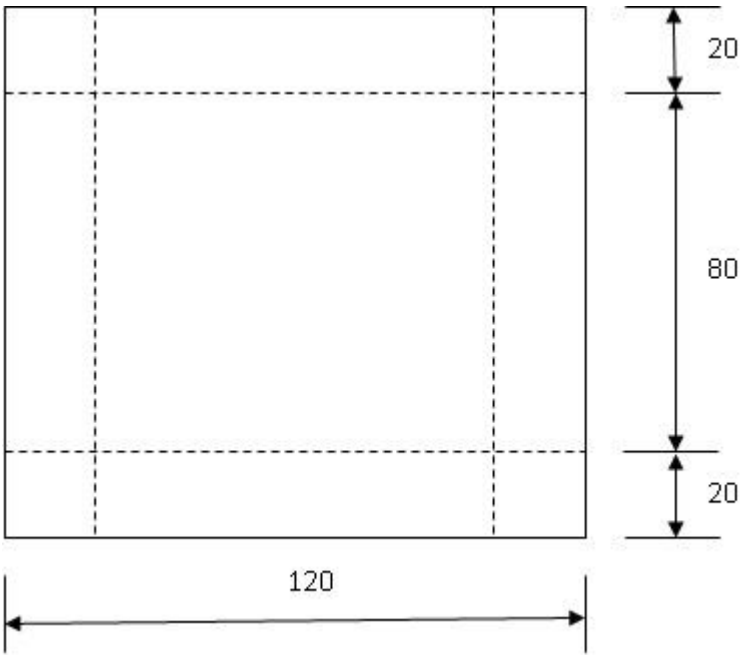

1 TRAY MAKING

Aim: To make a rectangular tray out of the given sheet with specified dimensions.

Tools required:

1. Sheet metal	2. Anvil	3. Try square	4. Steel rule
5. Divider	6. Snip	7. Scriber	
8. Mallet	9. File	10. Hand shearing machine	
11. Protractor etc.			

Materials required:

Tin or mild steel of suitable size.

Procedure:

1. Development of the rectangular tray for the given dimensions is drawn on the provided sheet metal using steel rule, protractor and scriber as shown in fig.
2. Assume some joining allowance on all sides of the development for locking the tray.
3. The sheet metal is exactly cut as per the markings made on it using a hand shearing machine or snip. The burrs are removed using a file.
4. Single hemming is made on the four sides of the tray as shown in fig.
5. Four sides are bent to 90° using stake / anvil.
6. Then the edges are bent for the length of joining allowance and the edges are made to overlap each other and are struck with a mallet to get the required joint.

Result:

Thus the rectangular tray of given dimension is fabricated with the given sheet metal.

VIVA QUESTIONS AND ANSWERS

1. What is a try square?

Try square is used for making and testing angles of 90degree

2. What is a Scriber?

It used to scribe or mark lines on metal work pieces.

3. What is a Divider?

This is used for marking circles, arcs, laying out perpendicular lines, bisecting lines, etc

4. What is a straight snip?

They have straight jaws and used for straight line cutting.

5. What is a Mallet?

It is wooden-headed hammer of round or rectangular cross section. The striking face is made flat to the work.

6. What is a Hammer?

Hammer is also used in sheet metal work for forming shapes. Commonly used hammers are rubber / nylon hammers and creasing hammer.

CENTRIFUGAL PUMP

A centrifugal pump is one of the simplest pieces of equipment in any process plant. Its purpose is to convert energy of a prime mover (a electric motor or turbine) first into velocity or kinetic energy and then into pressure energy of a fluid that is being pumped.

The energy changes occur by virtue of two main parts of the pump, the impeller and the volute or diffuser. The impeller is the rotating part that converts driver energy into the kinetic energy. The volute or diffuser is the stationary part that converts the kinetic energy into pressure energy.

Note: All of the forms of energy involved in a liquid flow system are expressed in terms of feet of liquid i.e. head.

Generation of Centrifugal Force

The process liquid enters the suction nozzle and then into eye (center) of a revolving device known as an impeller. When the impeller rotates, it spins the liquid sitting in the cavities between the vanes outward and provides centrifugal acceleration. As liquid leaves the eye of the impeller, a low-pressure area is created causing more liquid to flow toward the inlet. Because the impeller blades are curved, the fluid is pushed in a tangential and radial direction by the centrifugal force. This force acting inside the pump is the same one that keeps water inside a bucket that is rotating at the end of a string. Figure below depicts a side cross-section of a centrifugal pump indicating the movement of the liquid.

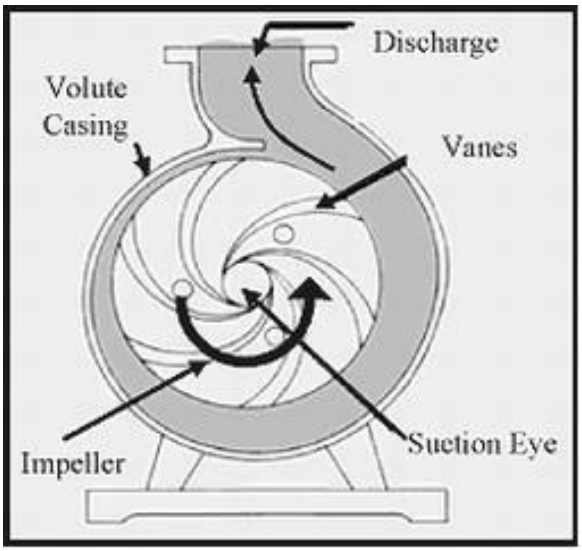

Conversion of Kinetic Energy to Pressure Energy

The key idea is that the energy created by the centrifugal force is kinetic energy. The amount of energy given to the liquid is proportional to the velocity at the edge or vane tip of the impeller. The faster the impeller revolves or the bigger the impeller is, then the higher will be the velocity of the liquid at the vane tip and the greater the energy imparted to the liquid.

This kinetic energy of a liquid coming out of an impeller is harnessed by creating a resistance to the flow. The first resistance is created by the pump volute (casing) that catches the liquid and slows it down. In the discharge nozzle, the liquid further decelerates and its velocity is converted to pressure according to Bernoulli's principle.

Therefore, the head (pressure in terms of height of liquid) developed is approximately equal to the velocity energy at the periphery of the impeller

This head can also be calculated from the readings on the pressure gauges attached to the suction and discharge lines.

General Components of Centrifugal Pumps

A centrifugal pump has two main components:

I. A rotating component comprised of an impeller and a shaft

II. A stationary component comprised of a casing, casing cover, and bearings.

AIR CONDITIONING

An air conditioner is an appliance, system, or mechanism designed to extract heat from an area using a refrigeration cycle. In construction, a complete system of heating, ventilation, and air conditioning is referred to as HVAC. Its purpose, in the home or in the car, is to provide comfort during either hot or cold weather.

Air conditioning system basics and theories

Refrigeration cycle

A simple diagram of the refrigeration cycle contains 1) condensing coil, 2) expansion valve, 3) evaporator coil, 4) compressor. In the refrigeration cycle, a heat pump transfers heat from a lower temperature heat source into a higher temperature heat sink. Heat would naturally flow in the opposite direction. This is the most common type of air conditioning. A refrigerator works in much the same way, as it pumps the heat out of the interior into the room in which it stands.

This cycle takes advantage of the way phase changes work, where latent heat is released at a constant temperature during a liquid/gas phase change, and where a different pressure of a pure substance means that it will condense/boil at a different temperature.

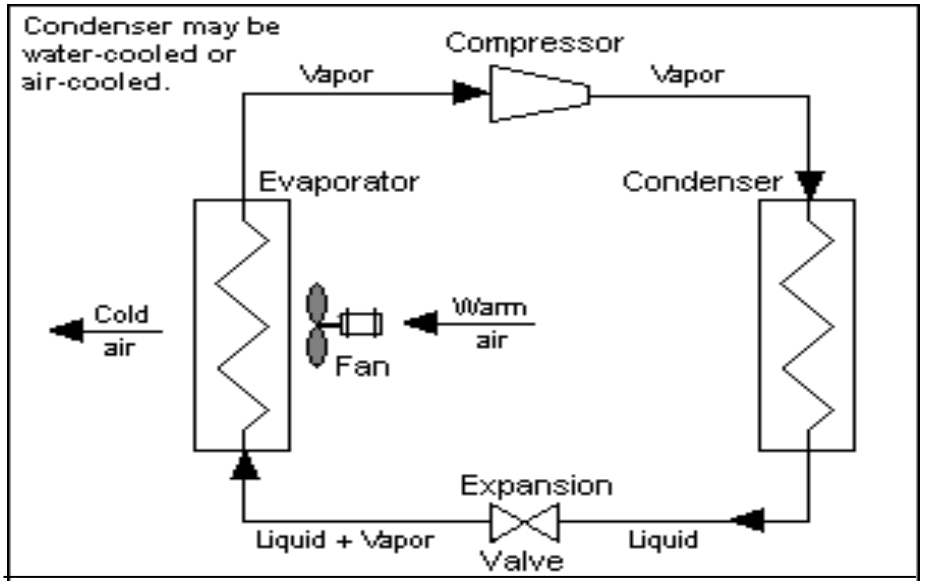

The most common refrigeration cycle uses an electric motor to drive a compressor. In an automobile, the compressor is driven by a belt over a pulley, the belt being driven by the engine's crankshaft (similar to the driving of the pulleys for the alternator, power steering, etc.). Whether in a car or the house, both use electric fan motors for air circulation. Since evaporation occurs when heat is absorbed, and condensation occurs when heat is released, air conditioners are designed to use a compressor to cause pressure changes between two compartments, and actively condense and pump a refrigerant around.

A refrigerant is pumped into the cooled compartment (the evaporator coil), where the low pressure and low temperature cause the refrigerant to evaporate into a vapor, taking heat with it. In the other compartment (the condenser), the refrigerant vapor is compressed and forced through another heat exchange coil, condensing into a liquid, rejecting the heat previously absorbed from the cooled space and the cycle repeats to keep the system at the required temperatu.

TOPIC BEYOND SYLLABUS

MACHINING A WORKPIECE BY BORING AND INTERNAL THREAD CUTTING OPERATIONS USING LATHE

Aim:

To perform the boring and internal thread cutting operations on the given work piece as per the given dimensions.

Material Required:

- Mild steel rod

Tools Required:

- Lathe
- Steel rule
- Vernier caliper
- Cutting tool
- Scriber
- Chuck key
- Tool post key
- Internal thread cutting tool

Procedure:

1. The dimension of the given work piece are checked by vernier caliper.

2. The work piece is held in the lathe chuck properly and it is tightened by chuck key.

3. The cutting tool is set in a tool post such that the point of the cutting tool coincides with the lathe axis.

4. The machine is switched ON to remove the work piece at the selected speed.

5. By the giving cross feed and longitudinal feed to the cutting tool the facing and turning operations are done respectively.

6. The speed of the work piece is reduced.

7. The external thread cutting operation is done by using external V thread cutting tool by engaging thread cutting mechanism.

8. The work piece is removed from the chuck and all the dimensions are measured and checked.

BORING AND INTERNAL THREAD CUTTING OPERATIONS

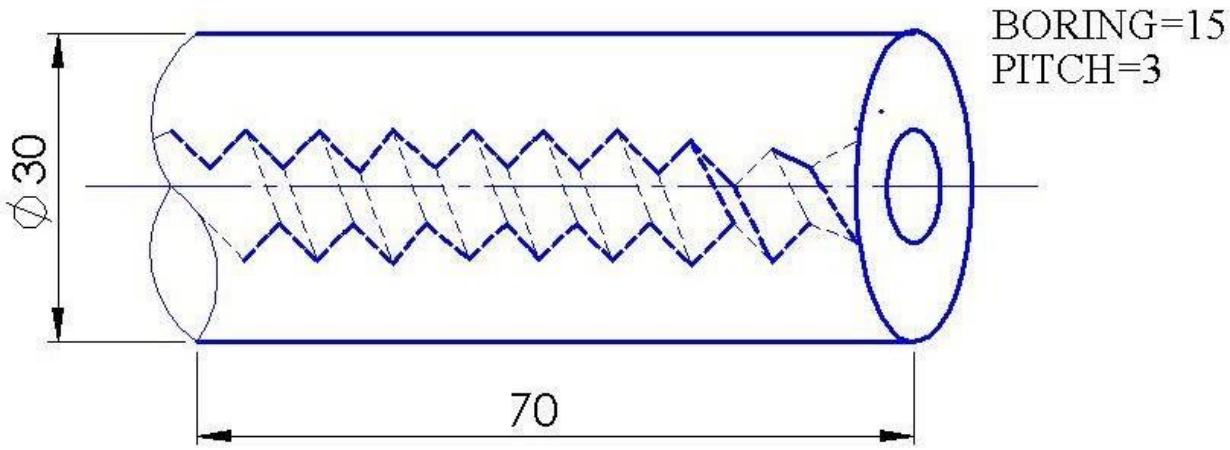

ALL DIMENSIONS ARE IN MM

Calculate Time for Boring

$$\text{Time for Boring} = \frac{\text{Length to be bored}}{\text{Feed/Rev. x r.p.m.}}$$

Calculate Time for Threading

$$\text{Time for Threading} = \frac{\text{Length of Thread}}{\text{Pitch x r.p.m.}}$$

Gearing ratio= Driver teeth/Driven teeth= TPI to be cut / TPI on lead screw (inch)

Gear ratio= Driver teeth/Driven teeth= **5Pn/127(**metric)

Depth of cut = 0.6403Xpitch

Pitch=1/No of TPI

Result: Thus the required size and shape of the given work piece is obtained

Fusion welding. Manual arc welding—one of the simplest welding methods—is based on the use of an electric arc. One pole of the power source is connected to a holder by means of a flexible cable; the other pole is connected to the object being welded. A carbon or metal electrode is inserted into the holder. If the electrode is touched briefly to the object, an arc is formed. The arc melts the base metal and the electrode rod (if the rod is made of metal), thus forming a molten pool, or weld puddle. Upon solidification, this pool becomes the weld. For a steel electrode, the temperature of the welding arc ranges from 6,000° to 10,000°C. Power supplied to the arc from specially designed units has a current of 100–350 amperes at 25–40 volts.

In arc welding, the oxygen and nitrogen of the atmosphere interact with the molten metal, forming oxides and nitrides that lower the strength and plasticity of the welded joint. There are internal and external methods of protecting the weld zone, such as introducing various substances into the electrode material or covering the electrodes (internal protection) or introducing inert gases or carbon dioxide into the weld zone or covering the weld zone with a flux (external protection). In the absence of external protection, the welding arc is called an unshielded arc; if external protection is used, it is called either a shielded arc or a submerged arc. Arc welding with an unshielded arc and consumable, covered electrodes is the most important method in actual practice. The high quality of the weld produced makes it possible to use this method for the fabrication of critical load-bearing parts.

One of the most important problems in welding engineering is the mechanization and automation of arc welding. Semiautomatic arc welding is often the most appropriate method for fabricating parts having complex shapes. In such a process, the feed of the electrode wire into the holder of a semiautomatic welder is mechanized. The arc may also be protected by a flux. The method, called submerged arc welding, was proposed in the late 19th century by N. G. Slavianov, who used powdered glass as a flux. An industrial version of the process was developed and introduced during the 1940's under the direction of Academician O. E. Paton. Submerged arc welding has found a substantial number of industrial applications because it is easily automated, is quite efficient, can be used in producing various types of welded joints, and yields a high-quality weld. During the welding process, the arc is covered by a layer of flux. The layer protects the operator's eyes from radiation, but it also makes it difficult to observe the formation of the weld.

Mechanized welding methods make use of gas-shielded arc welding, a technique introduced by N. N. Benardos at the end of the 19th century. The welding is done with a welding torch or in gas-filled chambers. Gases are fed to the arc continuously, thus ensuring a high-quality joint. Both inert and active gases can be used; the best results arc obtained using helium or argon. Helium is only used for special, critical work because of its high cost. A more widely used technique is automatic or semiautomatic welding with no consumable tungsten electrodes or consumable steel electrodes in argon or a mixture of argon with other gases. This method is appropriate for joining parts that usually are comparatively thin and that are made of aluminum, magnesium, or their alloys, all types of steel, high-temperature alloys, titanium and its alloys, nickel and copper alloys, niobium, zirconium, tantalum, and some other metals. Carbon dioxide welding is a very economical method that produces high-quality welds. Industrial applications of this technique were developed in the 1950's by the Central Scientific Research Institute of Technology and Machine Building under the direction of K. V. Liubavskii. The method uses an electrode wire and is suitable for joining steel parts 1–30 mm thick.

Underwater welding

1) Wet Welding 2) Dry Welding

In wet welding the welding is performed underwater, directly exposed to the wet environment. In dry welding, a dry chamber is created near the area to be welded and the welder does the job by staying inside the chamber.

WET WELDING Wet Welding indicates that welding is performed underwater, directly exposed to the wet environment. A special electrode is used and welding is carried out manually just as one does in open air welding. The increased freedom of movement makes wet welding the most effective, efficient and economical method.

Welding power supply is located on the surface with connection to the diver/welder via cables and hoses. In wet welding MMA (manual metal arc welding) is used. Power Supply used is DC Polarity: -ve polarity When DC is used with +ve polarity, electrolysis will take place and cause rapid deterioration of any metallic components in the electrode holder. For wet welding AC is not used on account of electrical safety and difficulty in maintaining an arc underwater. The power source should be a direct current machine rated at 300 or 400 amperes. Motor generator welding machines are most often used for underwater welding in the wet. The welding machine frame must be grounded to the ship. The welding circuit must include a positive type of switch, usually a knife switch operated on the surface and commanded by the welder-diver. The knife switch in the electrode circuit must be capable of breaking the full welding current and is used for safety reasons. The welding power should be connected to the electrode holder only during welding. Direct current with electrode negative (straight polarity) is used. Special welding electrode holders with extra insulation against the water are used. The underwater welding electrode holder utilizes a twist type head for gripping the electrode.